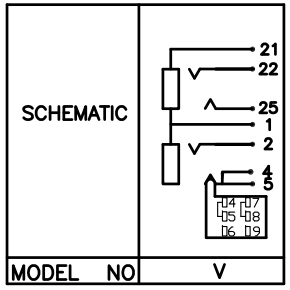

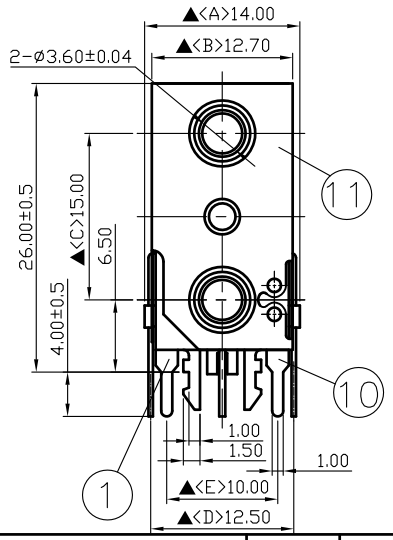

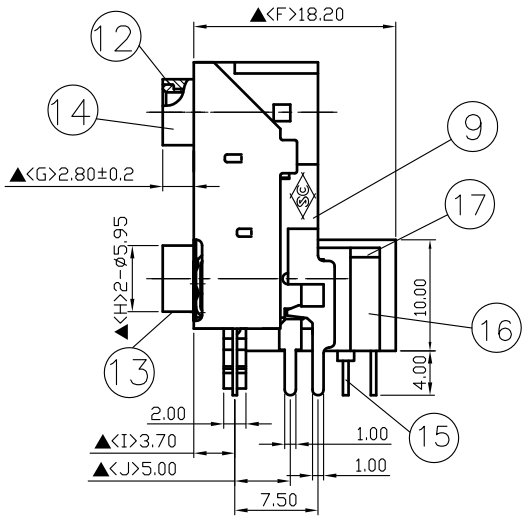

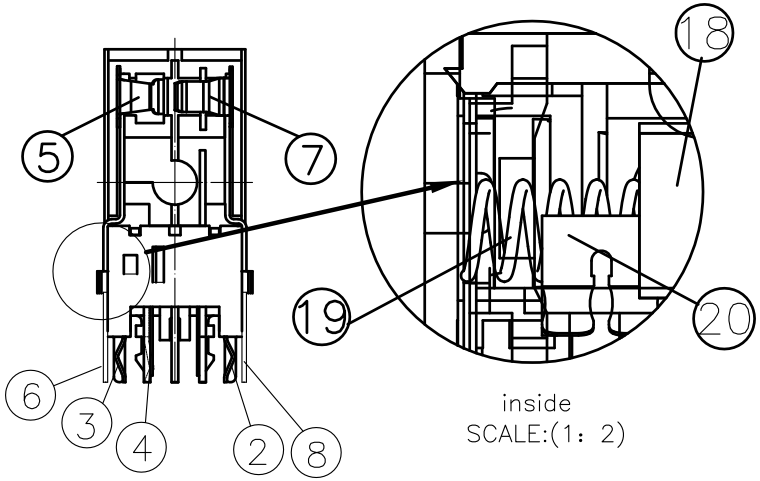

NO.	Description	Material	Q'TY	Finish
20.	Sequins	Tin Phosphor Bronze	2	
19.	Spring	SUS-304	1	
18.	Insulator	PA66+33%	1	Black Color
17.	Back Housing Cover	PA66+33%	1	Transparent
16.	Back Housing	PA66+33%	1	Black Color
15.	Switch Pin	0.4T Brass	6	Silver Plated
14.	Bushing(TOP)	PBT+30%	1	577C Green Color
13.	Bushing(DOWN)	PBT+30%	1	701C Pink Color
12.	Sleeve(Barrel)	Low Lead Brass Rod	2	Nickel Plated
11.	Metal Shell	0.2T Phosphor Copper	1	Silver Plated
10.	Earth Terminal(TOP)	0.4T Phosphor Copper	1	Silver Plated
9.	Houshing	PBT	1	Black Color
8.	Tip Lead(TOP)	0.4T Brass	1	Silver Plated
7.	Tip Spring(TOP)	0.25T Phosphor Copper	1	Silver Plated
6.	Ring Lead(TOP)	0.4T Brass	1	Silver Plated
5.	Ring Spring(TOP)	0.25T Phosphor Copper	1	Silver Plated
4.	Break Terminal(DOWN)	0.4T Brass	1	Silver Plated
3.	Tip Spring(DOWN)	0.25T Phosphor Copper	1	Silver Plated
2.	Ring Spring(DOWN)	0.3T Phosphor Copper	1	Silver Plated
1.	Earth Terminal(DOWN)	0.4T Phosphor Copper	1	Silver Plated

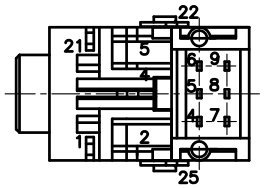

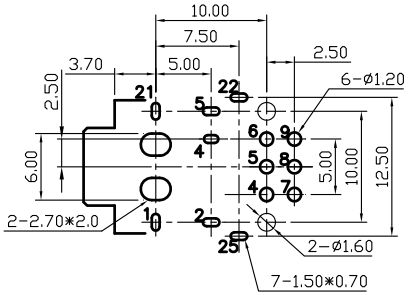

Pin Hole Layout
(Jack Bottom View)

S.C. PRECISION INDUSTRIAL CO., LTD.

DATE	DWN	CHKD	APVD	MANAGER
06.03.2024	王放策			

PART NAME : 3.5ø PHONE JACK | PART NUMBER : SCJ352M5NVSGPN4L | VERSION:1.0

TOLERANCE :±0.3mm UNLESS OTHERWISE SPECIFIED | UNIT:mm | SCALE:1/1

For Redference
僅供參考

RoHS&SVHC
Compliant

SPECIFICATIONS:
Contact Resistance : 30mΩ max
Insulation Resistance : 100MΩ min. at DC 500V
Dielectric Withstand Voltage : AC 500V for one minute
Remark: ▲: The Most Important Dimension