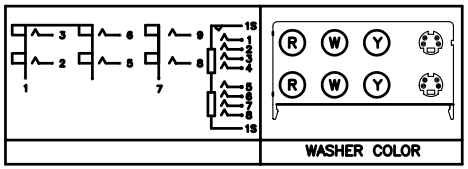

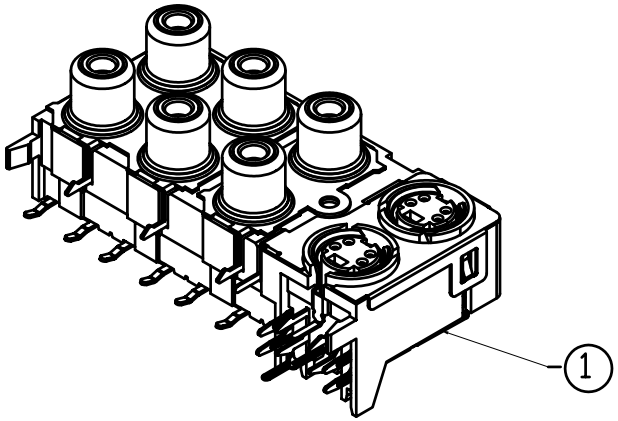

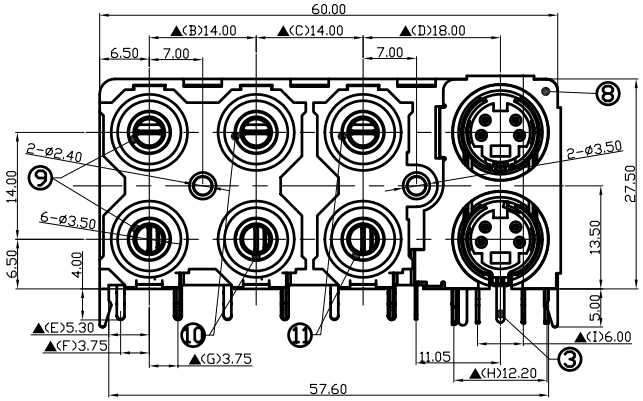

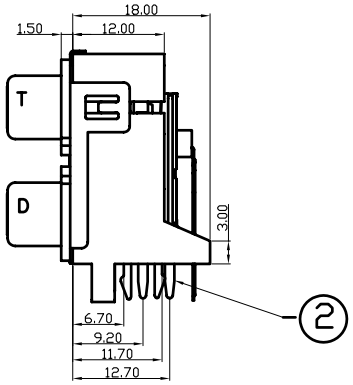

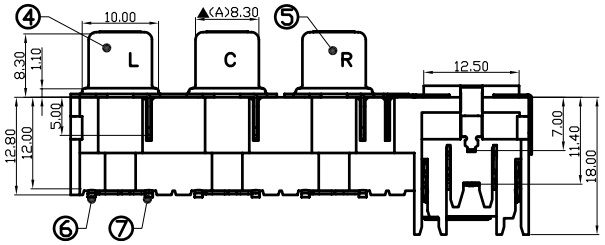

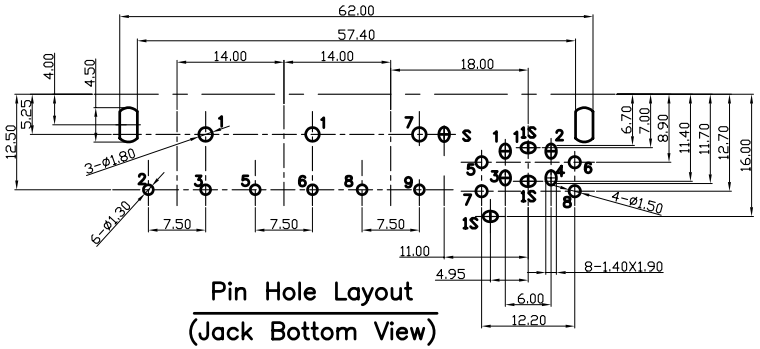

Pin Hole Layout
(Jack Bottom View)

NO.	Description	Material	Q'TY	Finish
11.	Insulator R	PBT	2	Yellow Color
10.	Insulator C	PBT	2	White Color
9.	Insulator L	PBT	2	Red Color
8.	Earth Terminal (DIN) 2	0.3T Bronze	1	Nickel Plated
7.	Terminal D	0.4T Bronze	3	Silver Plated
6.	Terminal T	0.4T Bronze	3	Silver Plated
5.	Earth Terminal R	0.4T Bronze	1	Nickel Plated
4.	Earth Terminal L	0.4T Bronze	1	Nickel Plated
3.	Earth Terminal (DIN) 1	0.4T Bronze	1	Nickel Plated
2.	Terminal (DIN)	0.4T Bronze	8	Silver Plated
1.	Housing	PPO	1	Black Color

S.C. PRECISION INDUSTRIAL CO., LTD.

DATE	DWN	CHKD	APVD	MANAGER
02.12.2007				

PART NAME : MINI DIN JACK & PIN JACK | PART NUMBER:SCP903S4BS0N234G | VERSION:4.0

TOLERANCE :±0.3mm UNLESS OTHERWISE SPECIFIED | UNIT:mm | SCALE:1/1

RoHS Compliant | For Reference 僅供參考

SPECIFICATIONS:
Contact Resistance : 30mΩ max
Insulation Resistance : 100MΩ min. at DC 500V
Dielectric Withstanding Voltage: AC 500V for one minute
Remark: ▲: The Most Important Dimension