SCHEMATIC	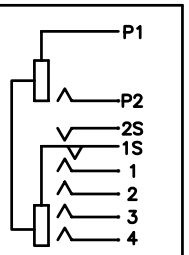
MODEL NO	4U

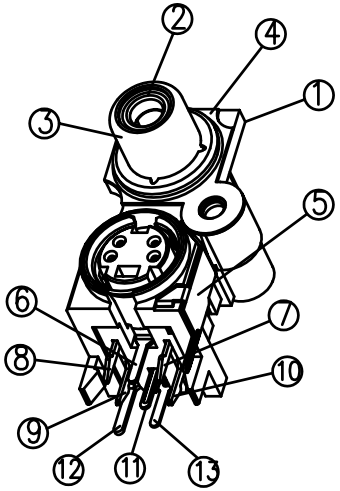

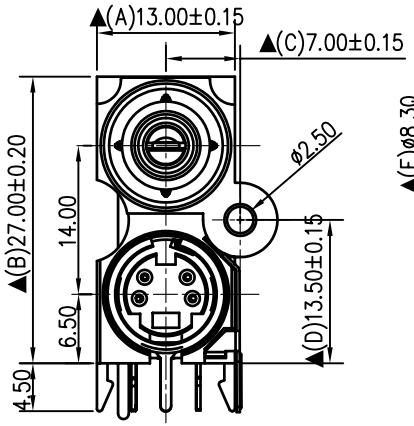

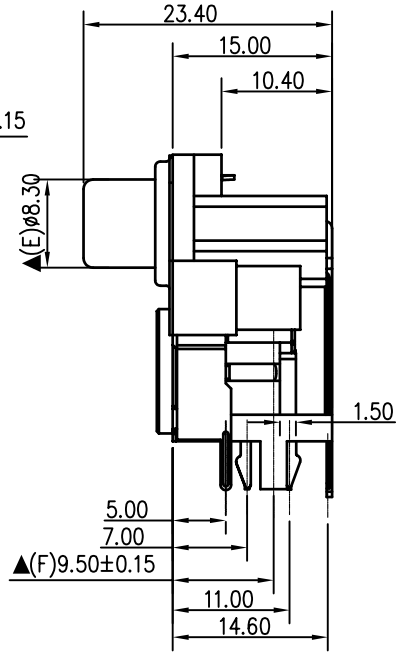

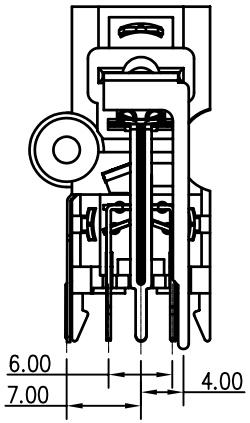

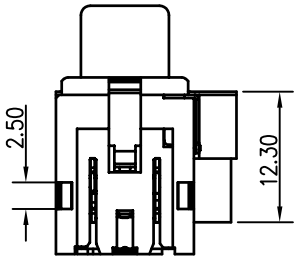

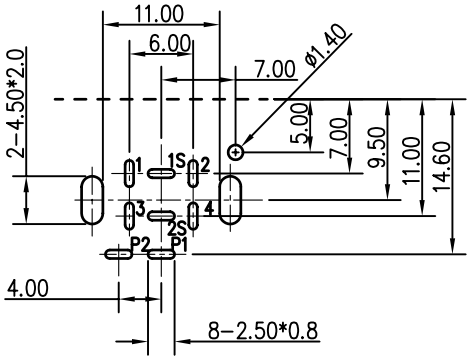

Pin Hole Layout
(Jack Bottom View)

NO.	Description	Material	Q'TY	Finish
13.	Earth Terminal 3	0.25T Brass	1	Silver Plated
12.	Terminal	0.5T Brass	1	Silver Plated
11.	Earth Spring	0.30T Phosphor Bronze	1	Silver Plated
10.	Terminal4(DIN)	0.4T Brass	1	Silver Plated
9.	Terminal3(DIN)	0.4T Brass	1	Silver Plated
8.	Terminal2(DIN)	0.4T Brass	1	Silver Plated
7.	Terminal1(DIN)	0.4T Brass	1	Silver Plated
6.	Earth Terminal 2	0.4T Brass	1	Nickel Plated
5.	Earth Terminal 1	0.3T Brass	1	Nickel Plated
4.	Metal Plate(RCA)	0.2T Brass	1	Nickel Plated
3.	shell(RCA)	0.3T Iron	1	Nickel Plated
2.	Insulator	PBT	1	Yellow Color
1.	Housing	PA66+33%GF	1	Black Color

S.C. PRECISION INDUSTRIAL CO., LTD.

DATE	DWN	CHKD	APVD	MANAGER
11.01.2007				

PART NAME : MINI DIN JACK & PIN JACK | PART NUMBER:SCP806S4BSUN403G | VERSION:2.0

TOLERANCE :±0.3mm UNLESS OTHERWISE SPECIFIED | UNIT:mm | SCALE:1/1

RoHS Pb Free Process

For Reference 僅供參考

SPECIFICATIONS:
Contact Resistance : 30mΩ max
Insulation Resistance : 100MΩ min. at DC 500V
Dielectric Withstand Voltage : AC 500V for one minute
Remark: ▲: The Most Important Dimension