SCHEMATIC	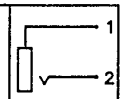
MODEL NO	U

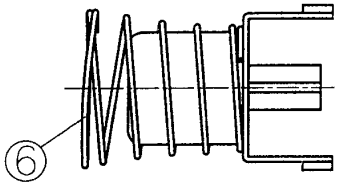

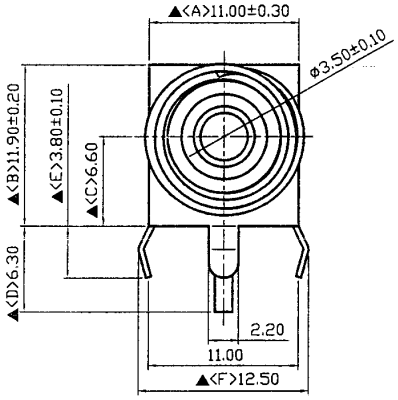

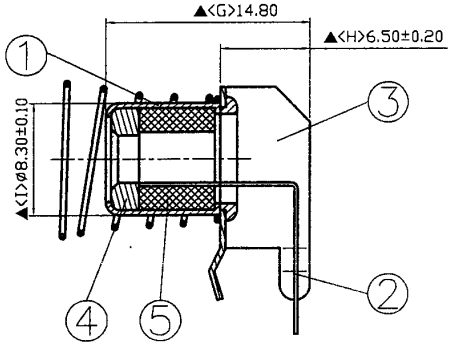

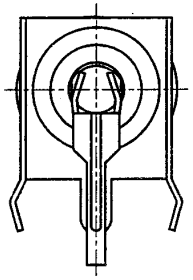

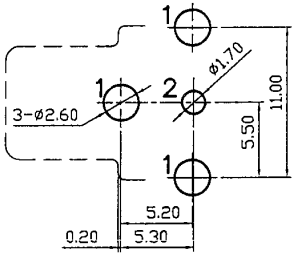

Pin Hole Layout
(Jack Bottom View)

NO.	Description	Material	Q'TY	Finish
6.	Spring	SWC	1	Nickel plated
5.	Insulator	PBT	1	Black Color
4.	Insulator	PBT	1	Red Color
3.	Body	0.4T Steel	1	Tin Plating
2.	Terminal	0.25T Brass	1	Tin Plating
1.	Barrel(Sleeve)	0.3T Steel	1	Nickel Plated

旭全 S.C. PRECISION INDUSTRIAL CO., LTD.

DATE	DWN	CHKD	APVD	MANAGER
06.08.2017	王平華			

PART NAME : PIN JACK | PART NUMBER: SCP601UNT2TT000G | VERSION: 4.0

TOLERANCE : ±0.3mm UNLESS OTHERWISE SPECIFIED | UNIT: mm | SCALE: /

RoHS Compliant

SPECIFICATIONS:
Contact Resistance : 30mΩ max
Insulation Resistance : 100MΩ min. at DC 500V
Dielectric Withstanding Voltage : AC 500V for one minute
Remark: ▲: The Most Important Dimension

旭全精密工業(深圳)有限公司 圖面發行

文管中心发行 2017-06-12