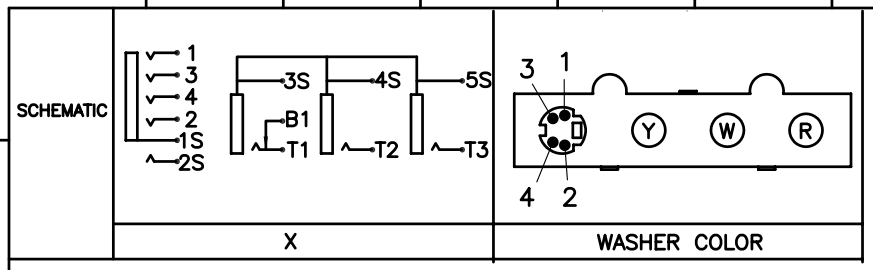

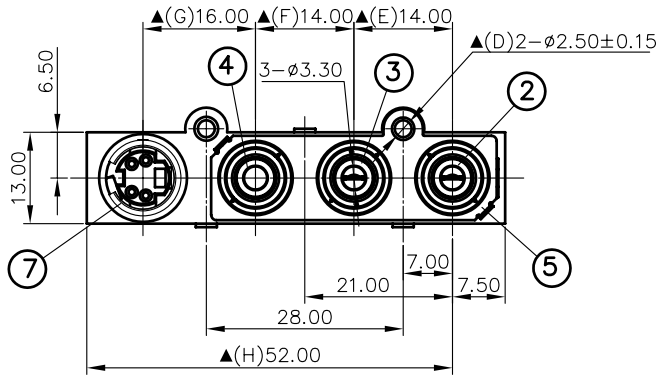

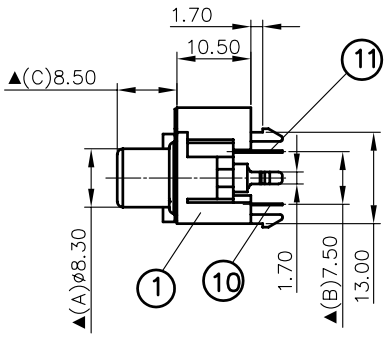

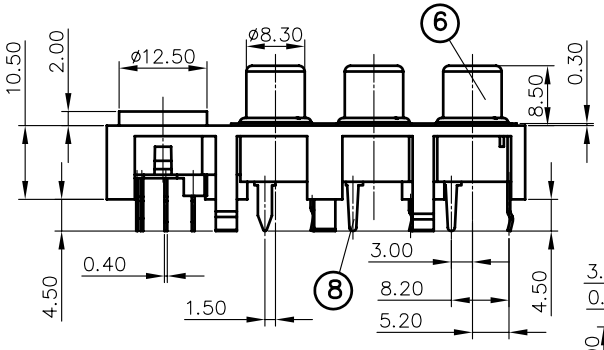

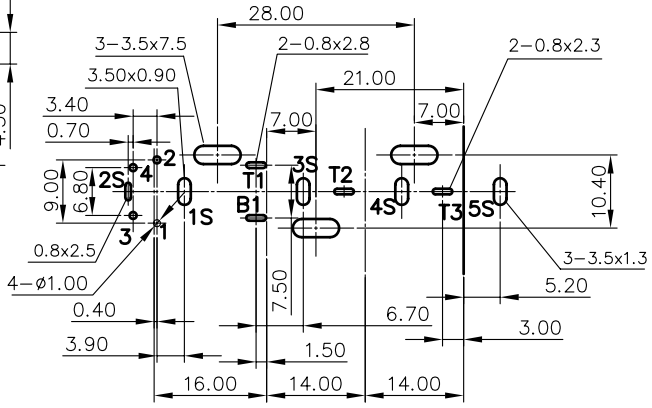

Pin Hole Layout
(Jack Bottom View)

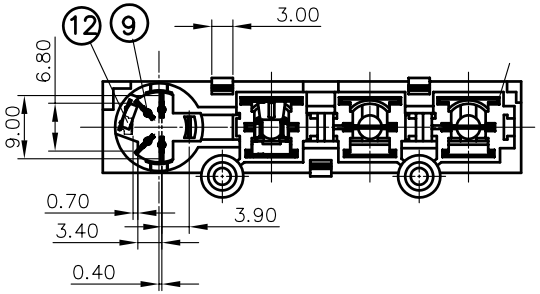

NO.	Description	Material	Q'TY	Finish
12.	Tip Contact	0.2T Phosphor Bronze	1	Silver Plated
11.	Tip Contact	0.3T Brass	1	Silver Plated
10.	Break Contact	0.3T Phosphor Bronze	1	Silver Plated
9.	Center Contact	0.4T Brass	4	Silver Plated
8.	Center Contact	0.4T Brass	2	Silver Plated
7.	Outer Contact	0.4T Brass	1	Nickel Plated
6.	Outer Contact	0.4T Brass	3	Nickel Plated
5.	Sealed Plate	0.2T SUS304	1	
4.	Washer	PBT	1	Yellow color
3.	Washer	PBT	1	White color
2.	Washer	PBT	1	Red color
1.	Housing	PA66+33%GF	1	Black Color

S.C. PRECISION INDUSTRIAL CO., LTD.

DATE	DWN	CHKD	APVD	MANAGER
08.17.2010				

PART NAME:PIN JACK | PART NUMBER:SCP811S4BSXN432G | VERSION:3.0

TOLERANCE:±0.3mm UNLESS OTHERWISE SPECIFIED | UNIT:mm | SCALE:1/1

RoHS Pb Free Process

For Reference 僅供參考

SPECIFICATIONS:
Contact Resistance :30mΩ max
Insulation Resistance :100MΩ min.at DC500V
Dielectric Withstand Voltage:AC 500V for one minute
Remark:▲:The Most Important Dimension