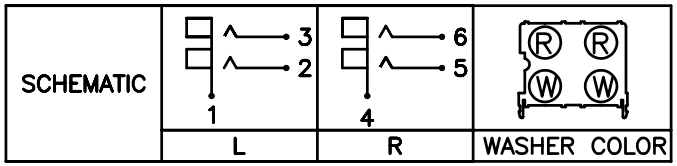

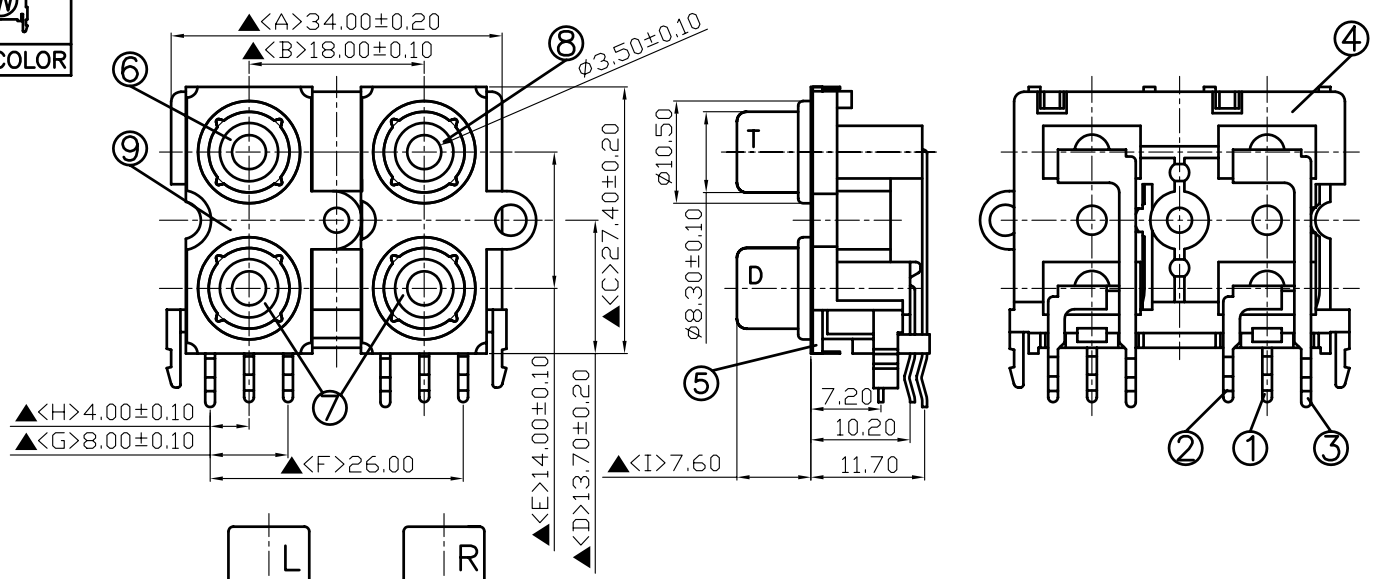

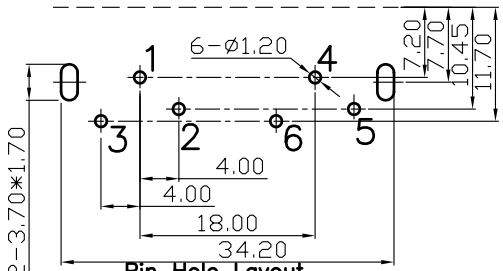

Pin Hole Layout
(Jack Bottom View)

NO.	Description	Material	Q'TY	Finish
9.	Metal Plate	0.2T Brass	2	Nickel Plated
8.	Washer R (T)	PBT	1	Red Color
7.	Washer LR (D)	PBT	2	White Color
6.	Washer L (T)	PBT	1	Red Color
5.	Cover	ABS	2	Black Color
4.	Base	ABS	1	White Color
3.	Terminal T	0.5T Brass	2	Silver Plated
2.	Terminal D	0.5T Brass	2	Silver Plated
1.	Earth Terminal (Barrel)	0.5T Brass	2	Nickel Plated

S.C. PRECISION INDUSTRIAL CO., LTD.

DATE	DWN	CHKD	APVD	MANAGER
09.06.2006				

PART NAME : PIN JACK

PART NUMBER: SCP6923NS232300G

VERSION:3.0

TOLERANCE :±0.3mm UNLESS OTHERWISE SPECIFIED

UNIT:mm

SCALE:1/1

RoHS Compliant

For Reference 僅供參考

SPECIFICATIONS:
Contact Resistance : 30mΩ max
Insulation Resistance : 100MΩ min. at DC 500V
Dielectric Withstanding Voltage: AC 500V for one minute
Remark: ▲: The Most Important Dimension