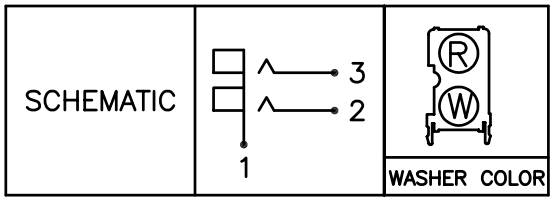

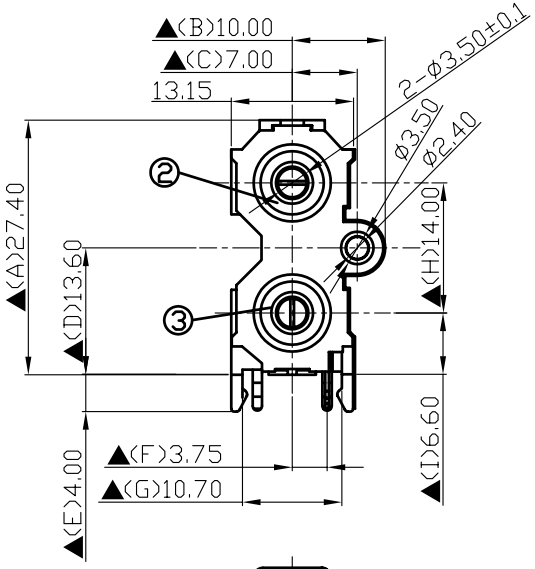

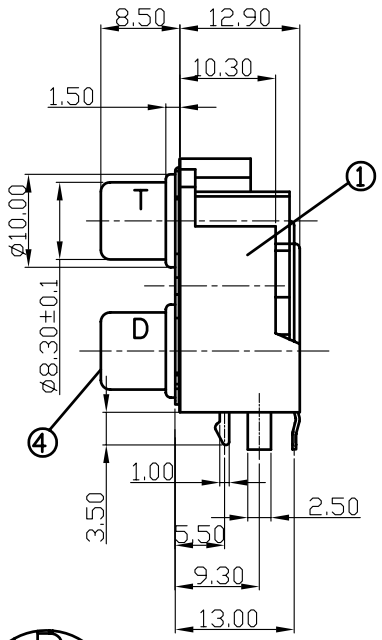

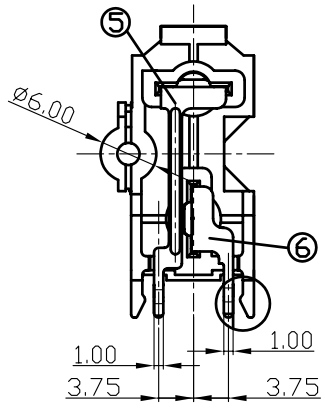

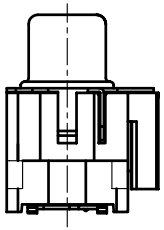

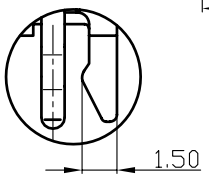

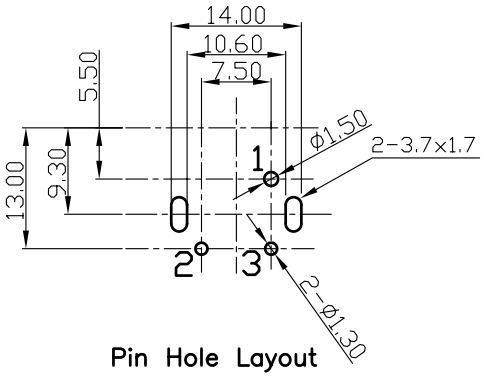

Pin Hole Layout
(Jack Bottom View)

NO.	Description	Material	Q'TY	Finish
6.	Terminal D	0.4T Bronze	1	Silver Plated
5.	Terminal T	0.4T Bronze	1	Silver Plated
4.	Earth Terminal	0.4T Bronze	1	Nickel Plated
3.	Washer	PBT	1	White Color
2.	Washer	PBT	1	Red Color
1.	Housing	PPO	1	Black Color

S.C. PRECISION INDUSTRIAL CO., LTD.

DATE	DWN	CHKD	APVD	MANAGER
01.25.2006				

PART NAME : PIN JACK

PART NUMBER:SCP6711NS230000G

VERSION:5.0

TOLERANCE :±0.3mm UNLESS OTHERWISE SPECIFIED

UNIT:mm

SCALE:1/1

RoHS Compliant

For Reference 僅供參考

SPECIFICATIONS:
Contact Resistance : 30mΩ max
Insulation Resistance : 100MΩ min. at DC 500V
Dielectric Withstanding Voltage: AC 500V for one minute
Remark: ▲: The Most Important Dimension