SCHEMATIC	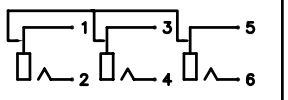	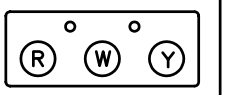
MODEL NO	U	L C R

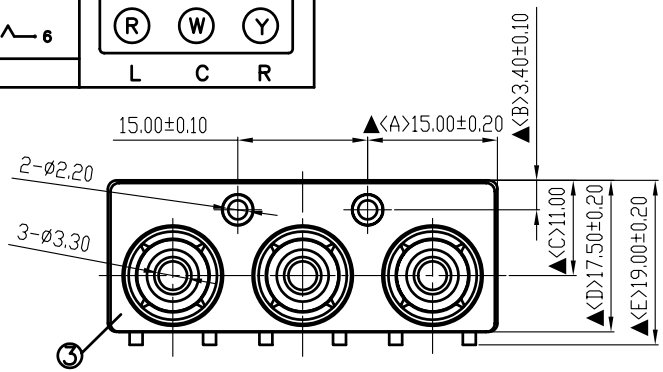

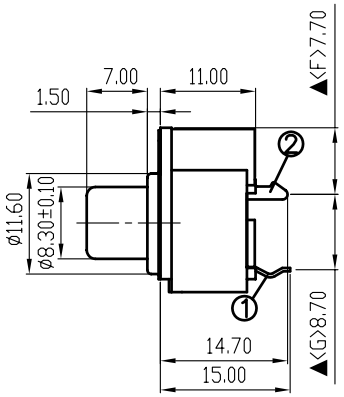

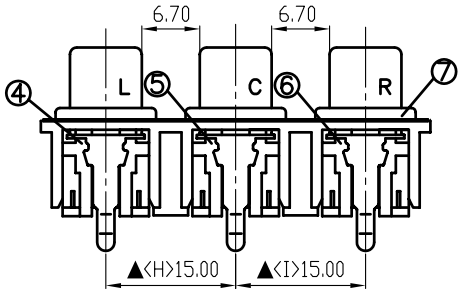

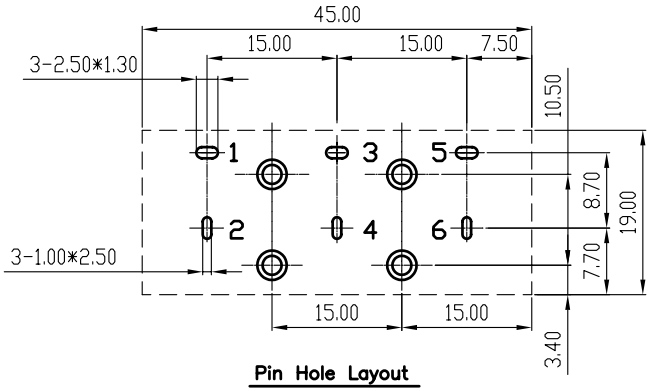

Pin Hole Layout
(Jack Bottom View)

NO.	Description	Material	Q'TY	Finish
7.	Metal Plate	0.2T Iron	1	Nickel Plated
6.	Housing	PBT	1	Yellow Color
5.	Housing	PBT	1	White Color
4.	Housing	PBT	1	Red Color
3.	Base	PBT	1	Black Color
2.	Pin	0.6T Brass	3	Silver Plated
1.	Earth Terminal	0.4T Brass	3	Nickel Plated

S.C. PRECISION INDUSTRIAL CO., LTD

DATE	DWN	CHKD	APVD	MANAGER
12.15.2005				

PART NAME :PIN JACK | PART NUMBER:SCP668CNS234U00G | VERSION:4.0

TOLERANCE :±0.3mm UNLESS OTHERWISE SPECIFIED | UNIT:mm | SCALE:1/1

RoHS Compliant | For Reference 僅供參考

SPECIFICATIONS:
Contact Resistance : 30mΩ max
Insulation Resistance : 100MΩ min. at DC 500V
Dielectric Withstanding Voltage: AC 500V for one minute
Remark: ▲: The Most Important Dimension