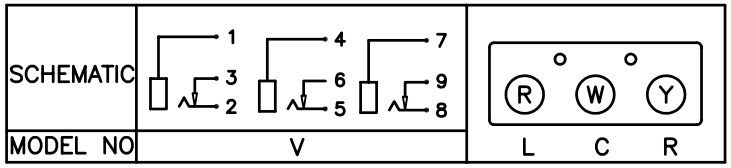

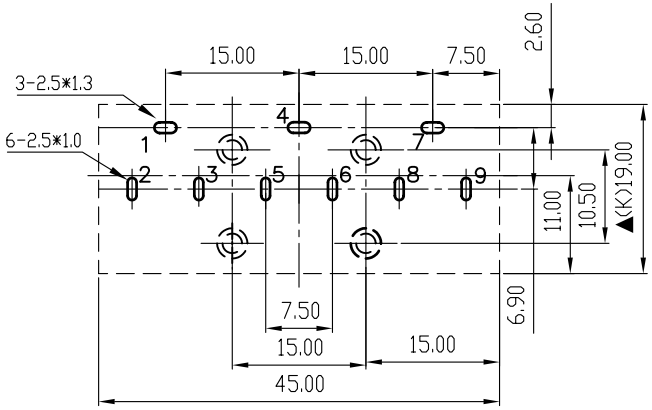

Pin Hole Layout
(Jack Bottom View)

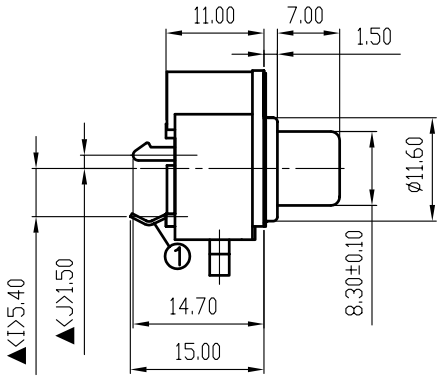

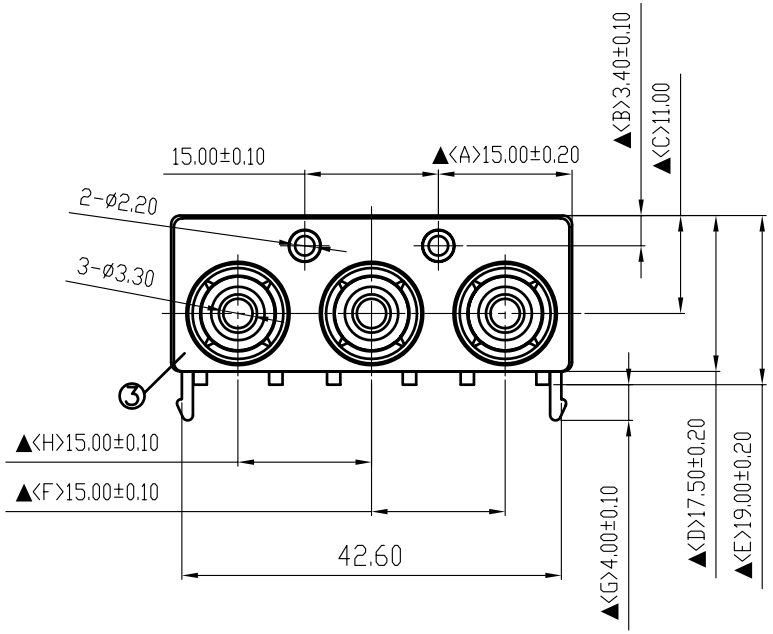

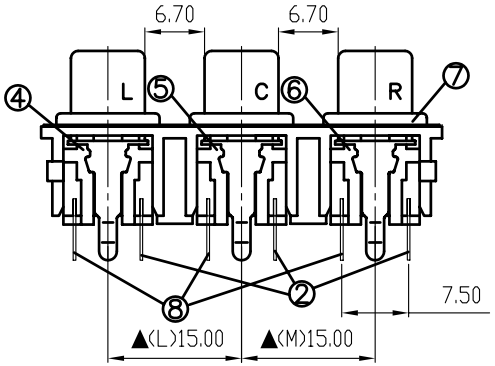

NO.	Description	Material	Q'TY	Finish
8.	Pin	0.3T Phosphor Bronze	3	Silver Plated
7.	Metal Plate	0.2T Iron	1	Nickel Plated
6.	Housing	PBT	1	Yellow Color
5.	Housing	PBT	1	White Color
4.	Housing	PBT	1	Red Color
3.	Base	PBT	1	Black Color
2.	Pin	0.3T Phosphor Bronze	3	Silver Plated
1.	Earth Terminal	0.4T Brass	3	Nickel Plated

S.C. PRECISION INDUSTRIAL CO., LTD.

DATE	DWN	CHKD	APVD	MANAGER
04.29.2008				

PART NAME :PIN JACK | PART NUMBER:SCP667CNS234V00G | VERSION:2.0

TOLERANCE :±0.3mm UNLESS OTHERWISE SPECIFIED | UNIT:mm | SCALE:1/1

RoHS Compliant | For Reference 僅供參考

SPECIFICATIONS:
Contact Resistance : 30mΩ max
Insulation Resistance : 100MΩ min. at DC 500V
Dielectric Withstand Voltage : AC 500V for one minute
Remark: ▲: The Most Important Dimension