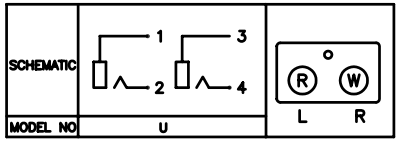

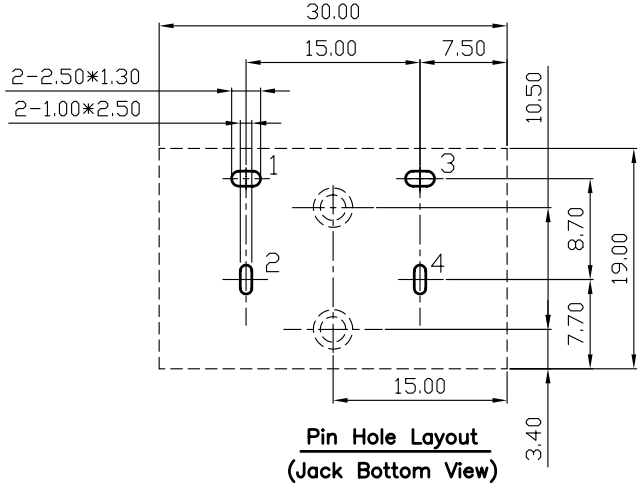

Pin Hole Layout
(Jack Bottom View)

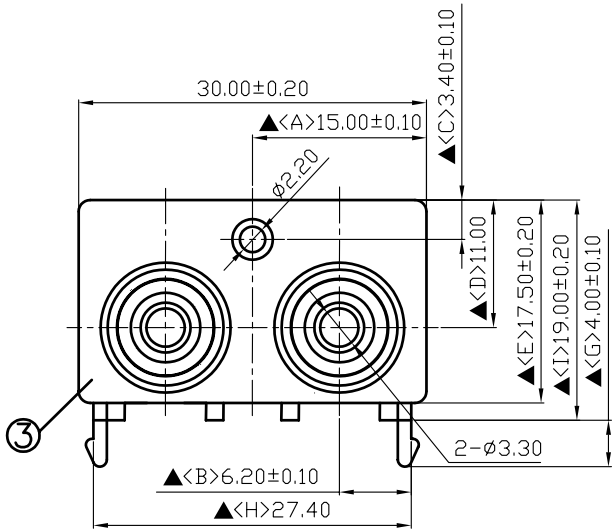

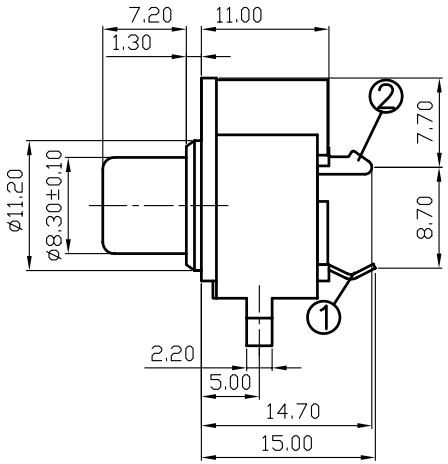

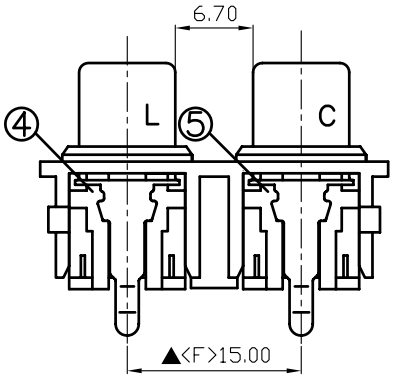

NO.	Description	Material	Q'TY	Finish
5.	Housing	PBT	1	White Color
4.	Housing	PBT	1	Red Color
3.	Base	PBT	1	Black Color
2.	Pin	0.6T Brass	2	Silver Plated
1.	Earth Terminal	0.4T Brass	2	Nickel Plated

S.C. PRECISION INDUSTRIAL CO., LTD.

DATE	DWN	CHKD	APVD	MANAGER
12.09.2005				

PART NAME : PIN JACK

PART NUMBER :SCP666BNS230U00G

VERSION: 4.0

TOLERANCE :±0.3mm UNLESS OTHERWISE SPECIFIED

UNIT:mm

SCALE:1/1

RoHS Compliant

For Reference 僅供參考

SPECIFICATIONS:
Contact Resistance : 30mΩ max
Insulation Resistance : 100MΩ min. at DC 500V
Dielectric Withstand Voltage : AC 500V for one minute
Remark: ▲: The Most Important Dimension