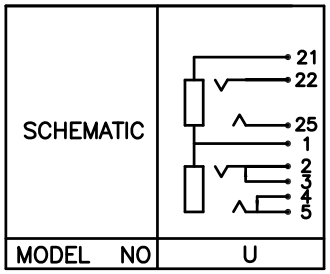

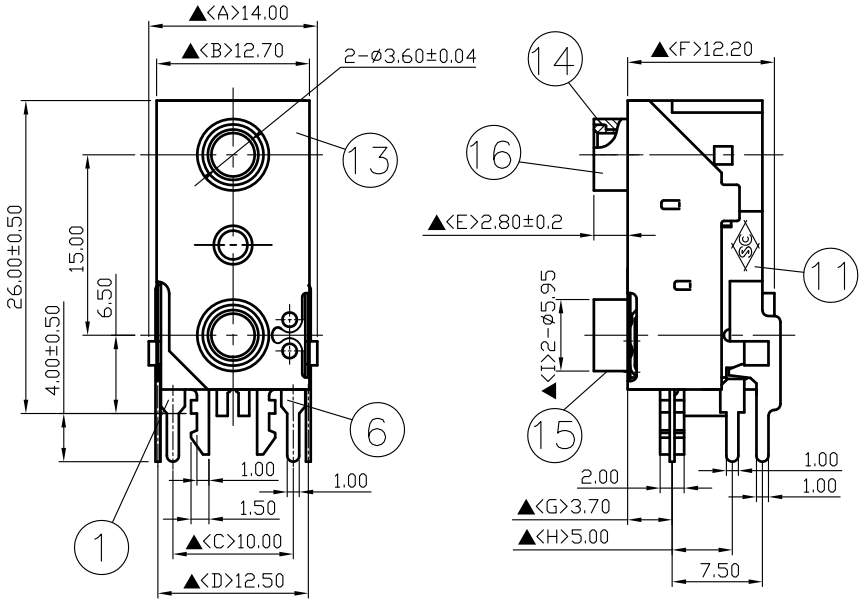

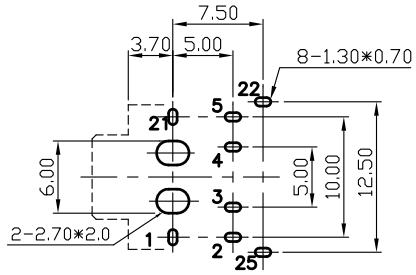

Pin Hole Layout
(Jack Bottom View)

NO.	Description	Material	Q'TY	Finish
16.	Bushing(TOP)	PBT+30%	1	577C Green Color
15.	Bushing(DOWN)	PBT+30%	1	701C Pink Color
14.	Sleeve(Barrel)	Low Lead Brass Rod	1	Nickel Plated
13.	Metal Shell	0.2T Phosphor Copper	1	Silver Plated
12.	Cover	PBT+15%	1	Black Color
11.	Houshing	PBT	1	Black Color
10.	Tip Lead(TOP)	0.4T Brass	1	Silver Plated
9.	Tip Spring(TOP)	0.25T Phosphor Copper	1	Silver Plated
8.	Ring Lead(TOP)	0.4T Brass	1	Silver Plated
7.	Ring Spring(TOP)	0.25T Phosphor Copper	1	Silver Plated
6.	Earth Terminal(TOP)	0.4T Phosphor Copper	1	Silver Plated
5.	Tip Spring(DOWN)	0.25T Phosphor Copper	1	Silver Plated
4.	Break Terminal(DOWN)	0.4T Brass	1	Silver Plated
3.	Break Terminal(DOWN)	0.4T Brass	1	Silver Plated
2.	Ring Spring(DOWN)	0.3T Phosphor Copper	1	Silver Plated
1.	Earth Terminal(DOWN)	0.4T Phosphor Copper	1	Silver Plated

S.C. PRECISION INDUSTRIAL CO., LTD.

DATE	DWN	CHKD	APVD	MANAGER
06.03.2024	王放策			

PART NAME : 3.5ø PHONE JACK | PART NUMBER: SCJ351M5NUSGPN4L | VERSION:1.0

TOLERANCE : ±0.3mm UNLESS OTHERWISE SPECIFIED | UNIT:mm | SCALE:1/1

For Redference
僅供参考

RoHS&SVHC
Compliant

SPECIFICATIONS:
Contact Resistance : 30mΩ max
Insulation Resistance : 100MΩ min. at DC 500V
Dielectric Withstanding Voltage: AC 500V for one minute
Remark: ▲: The Most Important Dimension