Knob Color			
Ⓐ	Ⓑ	Ⓒ	Ⓓ
RED	BLACK	BLACK	RED

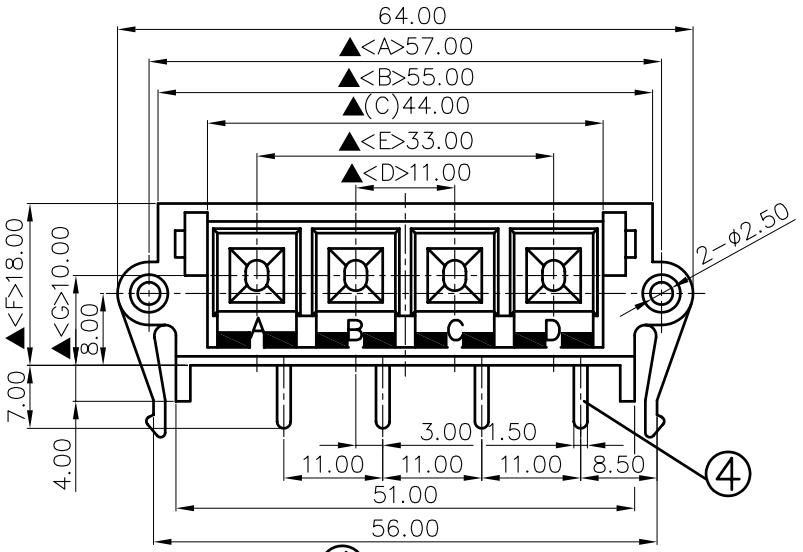

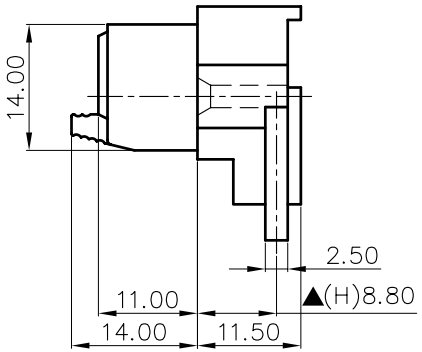

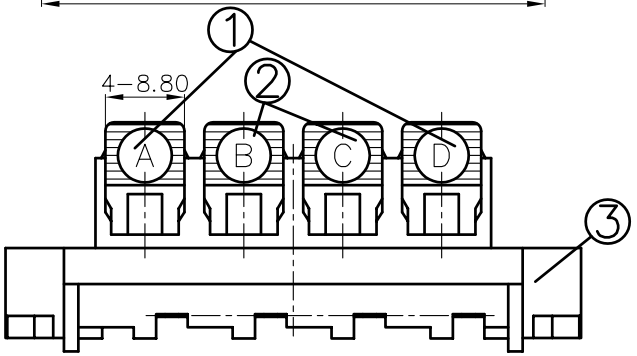

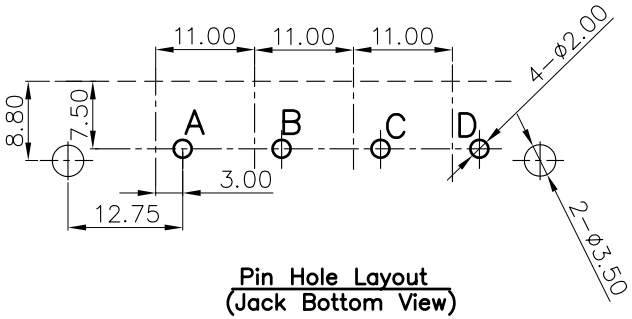

Pin Hole Layout
(Jack Bottom View)

NO.	Description	Material	Q'TY	Finish
4.	Terminal	0.3T Phosphor Bronze	4	Silver Plated
3.	Base	ABS	1	Black Color
2.	Press Button	ABS	2	Black Color
1.	Press Button	ABS	2	Red Color

S.C. PRECISION INDUSTRIAL CO., LTD.

DATE	DWN	CHKD	APVD	MANAGER
10.20.2011				

PART NAME : PUSH TERMINAL BOARD | PART NUMBER: SCT730D21120000G | VERSION:4.0

TOLERANCE :±0.3mm UNLESS OTHERWISE SPECIFIED | UNIT:mm | SCALE:1/1

RoHS Compliant

For Reference 僅供參考

SPECIFICATIONS:
Contact Resistance : 30mΩ max
Insulation Resistance : 100MΩ min. at DC 500V
Dielectric Withstanding Voltage: AC 500V for one minute
Remark: ▲: The Most Important Dimension