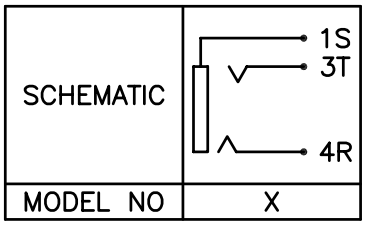

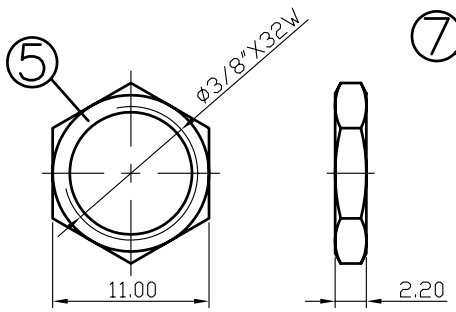

NUT

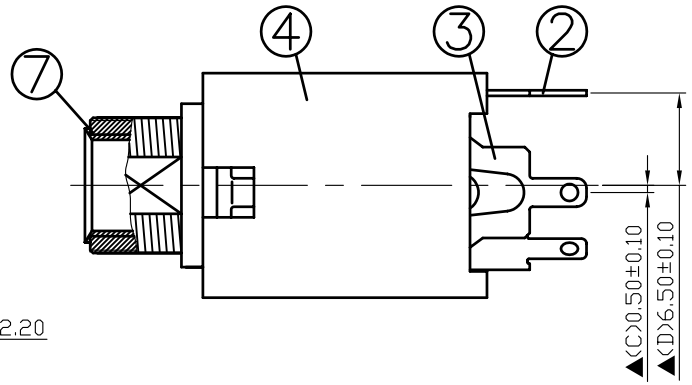

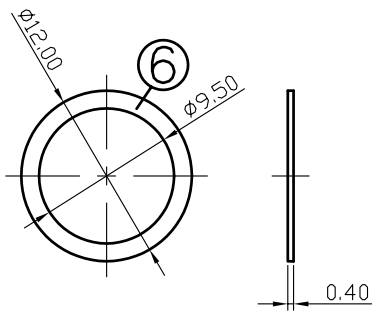

WASHER

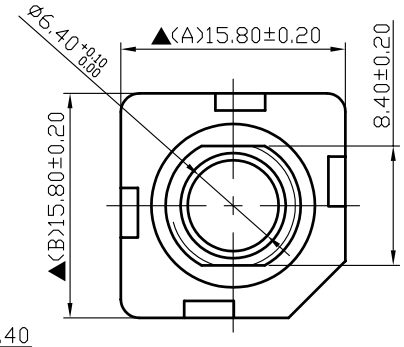

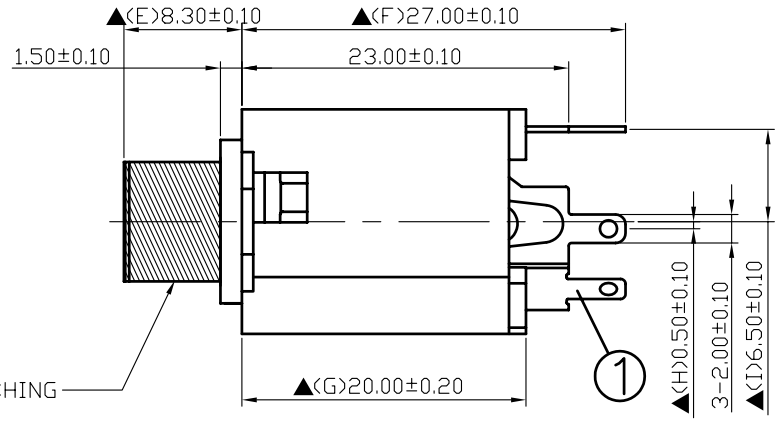

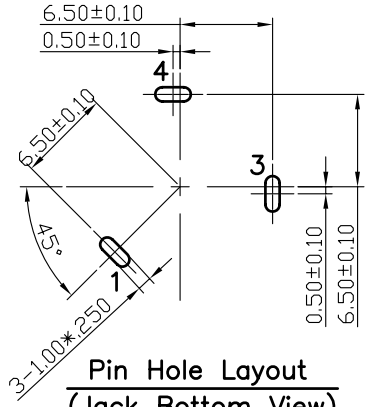

Pin Hole Layout
(Jack Bottom View)

NO.	Description	Material	Q'TY	Finish
7.	Bushing	Brass	1	Nickel Plated
6.	Washer	0.4T Brass	1	Nickel Plated
5.	Nut	2.2T Brass	1	Nickel Plated
4.	Housing	PBT	1	Black Color
3.	Ring Spring	0.4T Phosphor Bronze	1	Silver Plated
2.	Tip Spring	0.4T Phosphor Bronze	1	Silver Plated
1.	Earth Terminal	0.4T Brass	1	Silver Plated

S.C. PRECISION INDUSTRIAL CO., LTD.

DATE	DWN	CHKD	APVD	MANAGER
10.12.2011				

PART NAME :6.3ø PHONE JACK | PART NUMBER: SCJ649R6NXS4B00G | VERSION:2.0

TOLERANCE :±0.3mm UNLESS OTHERWISE SPECIFIED | UNIT:mm | SCALE:1/1

RoHS Compliant

For Reference 僅供參考

SPECIFICATIONS:
Contact Resistance : 30mΩ max
Insulation Resistance : 100MΩ min. at DC 500V
Dielectric Withstand Voltage : AC 500V for one minute
Remark: ▲: The Most Important Dimension