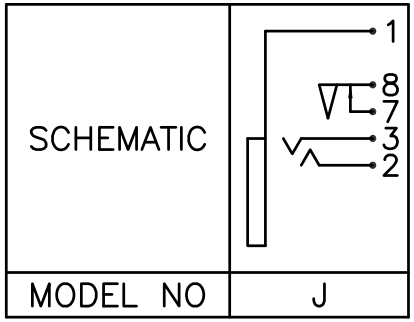

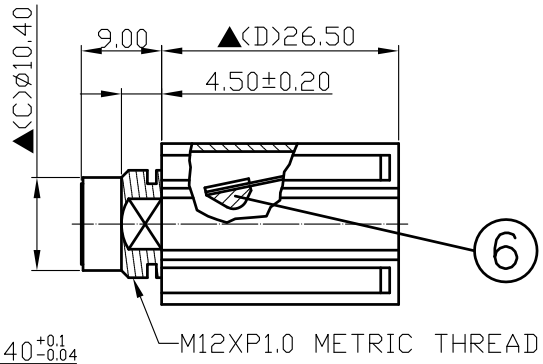

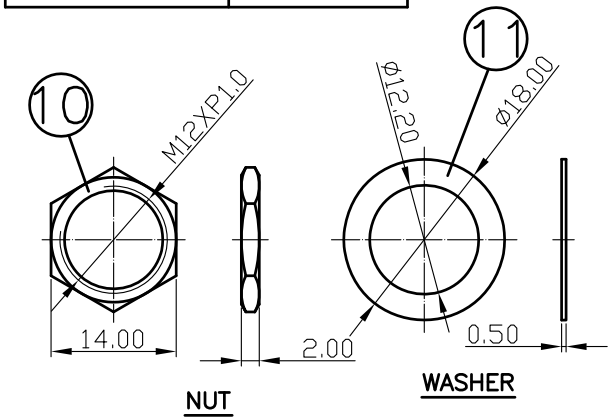

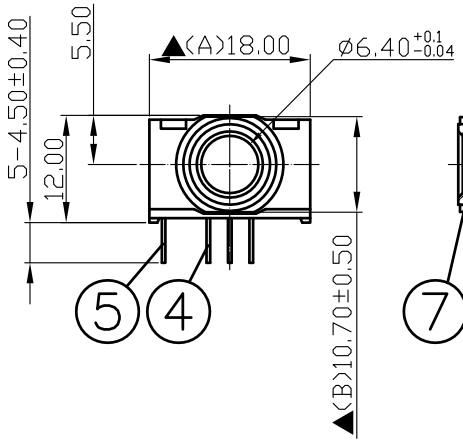

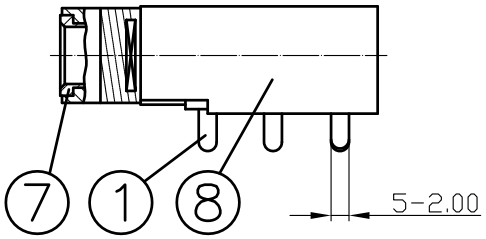

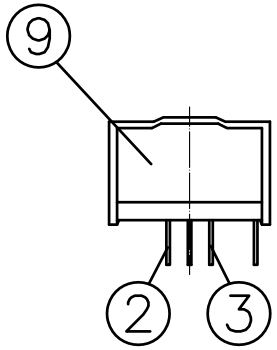

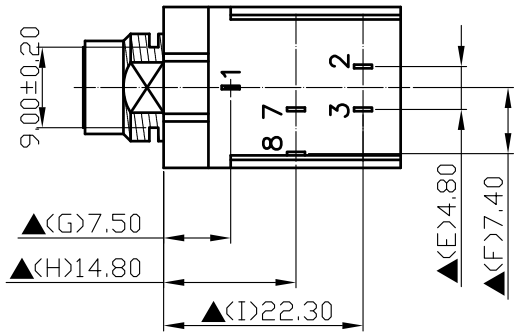

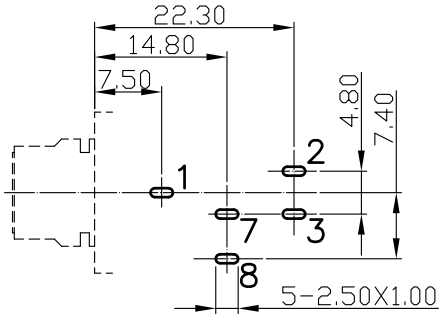

Pin Hole Layout
(Jack Bottom View)

NO.	Description	Material	Q'TY	Finish
11.	Washer	0.5T Steel	1	Nickel Plated
10.	Nut	2.0T Steel	1	Nickel Plated
9.	Cover	PC	1	Transparent
8.	Housing	PBT+15%	1	Black Color
7.	Metal Ring	Low Lead Brass Rod	1	Nickel Plated
6.	Insulator	POM	1	Black Color
5.	Break Terminal	0.35T Phosphor Bronze	1	Silver Plated
4.	Transfer Terminal	0.4T Brass	1	Silver Plated
3.	Ring Spring	0.25T Phosphor Bronze	1	Silver Plated
2.	Tip Spring	0.3T Phosphor Bronze	1	Silver Plated
1.	Earth Terminal	0.3T Phosphor Bronze	1	Silver Plated

S.C. PRECISION INDUSTRIAL CO., LTD.

DATE	DWN	CHKD	APVD	MANAGER
01.11.2022	王平華			

PART NAME :6.3ø PHONE JACK | PART NUMBER:SCJ624R0NJS1B00L | VERSION:1.0

TOLERANCE :±0.3mm UNLESS OTHERWISE SPECIFIED | UNIT:mm | SCALE:1/1

For Redference
僅供參考

RoHS&SVHC
Compliant

SPECIFICATIONS:
Contact Resistance : 30mΩ max
Insulation Resistance : 100MΩ min. at DC 500V
Dielectric Withstanding Voltage: AC 500V for one minute
Remark: ▲: The Most Important Dimension