SCHEMATIC	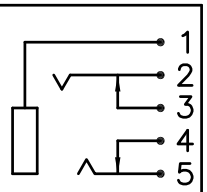
MODEL NO	U

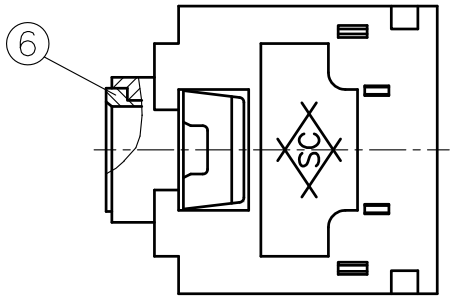

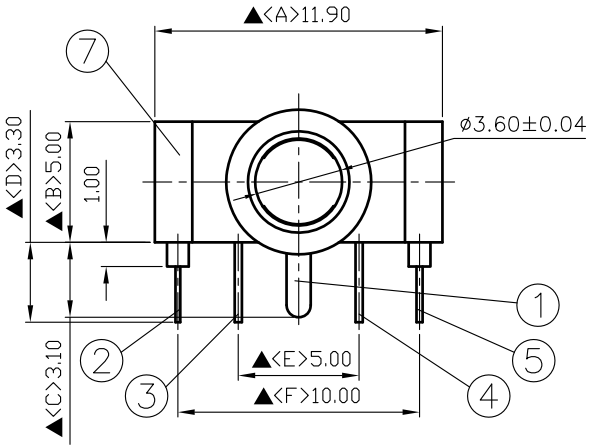

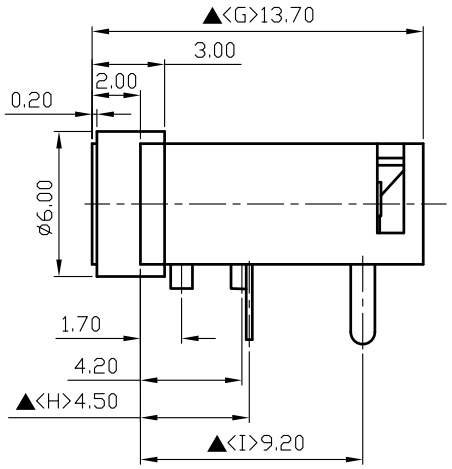

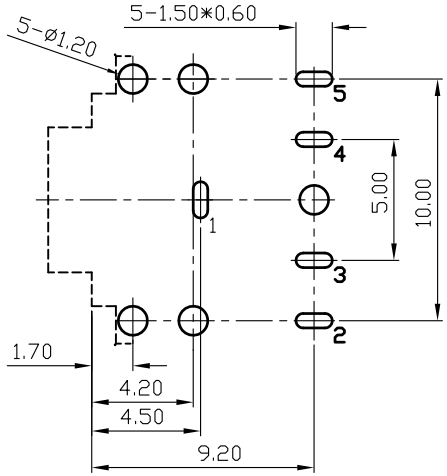

Pin Hole Layout
(Jack Bottom View)

NO	Descripcion	Material	Q'TY	Finish
7	Housing	PBT+15%	1	Black Color
6	Barrel	Low Lead Brass Rod	1	Nickel Plated
5	Tip Spring	0.25T YcuT	1	Silver Plated
4	Break Terminal	0.3T Brass	1	Silver Plated
3	Break Terminal	0.3T Brass	1	Silver Plated
2	Ring Spring	0.2T YcuT	1	Silver Plated
1	Earth Terminal	0.2T Phosphor Bronze	1	Silver Plated

S.C. PRECISION INDUSTRIAL CO., LTD. 旭全

DATE	DWN	CHKD	APVD	MANAGER
11.22.2021	王平華			

PART NAME :3.5ø PHONE JACK | PART NUMBER:SCJ355R0NUS0B00L | VERSION:1.0

TOLERANCE :±0.3mm UNLESS OTHERWISE SPECIFIED | UNIT:mm | SCALE:1/1

For Redference
僅供參考

RoHS&SVHC
Compliant

SPECIFICATIONS:
Contact Resistance : 30mΩ max
Insulation Resistance : 100MΩ min. at DC 500V
Dielectric Withstanding Voltage: AC 500V for one minute
Remark: ▲ : The Most Important Dimension