SCHEMATIC	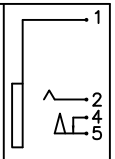
MODEL NO	G

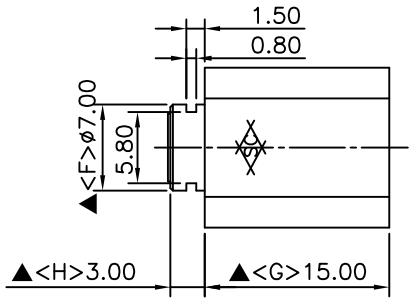

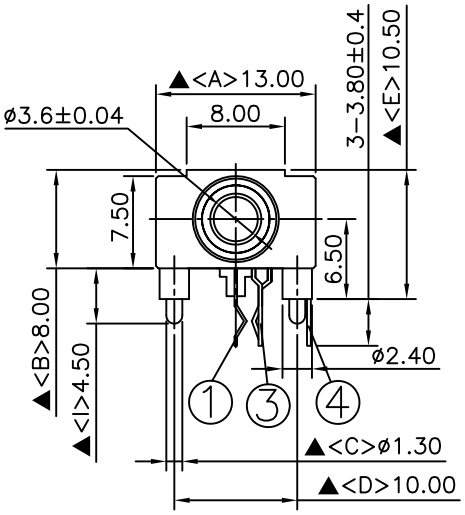

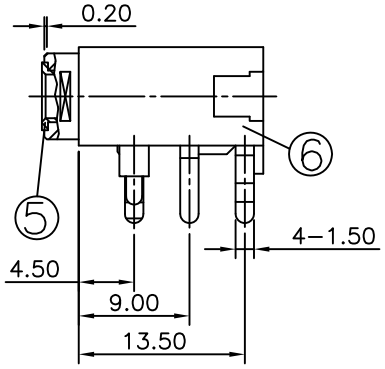

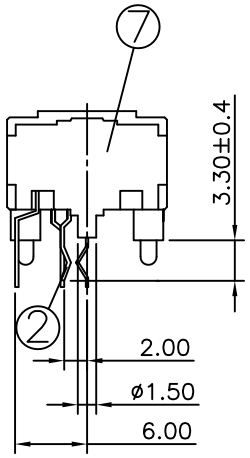

NO.	Description	Material	Q TY	Finish
7.	Cover	POM	1	White Color
6.	Housing	PBT+15%	1	Black Color
5.	Barrel	Low Lead Brass Rod	1	Nickel Plated
4.	Separator Spring	0.25T Phosphor Bronze	1	Silver Plated
3.	Break Terminal	0.3T Brass	1	Silver Plated
2.	Tip Spring	0.3T Phosphor Bronze	1	Silver Plated
1.	Earth Spring	0.2T Phosphor Bronze	1	Silver Plated

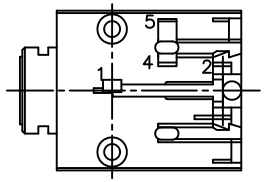

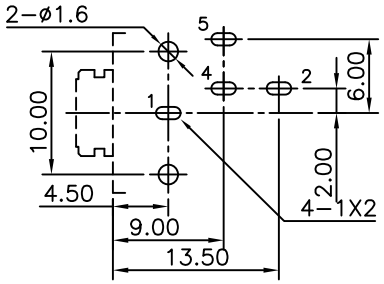

Pin Hole Layout
(Jack Bottom View)

S.C. PRECISION INDUSTRIAL CO., LTD.

DATE	DWN	CHKD	APVD	MANAGER
12.14.2021	王平華			

PART NAME :3.5ø PHONE JACK | PART NUMBER: SCJ348R0NGS0B00L | VERSION:1.0

TOLERANCE :±0.3mm UNLESS OTHERWISE SPECIFIED | UNIT:mm | SCALE:1/1

For Redference
僅供參考

RoHS&SVHC
Compliant

SPECIFICATIONS:
Contact Resistance : 30mΩ max
Insulation Resistance : 100MΩ min. at DC 500V
Dielectric Withstanding Voltage: AC 500V for one minute
Remark: ▲: The Most Important Dimension