SCHEMATIC	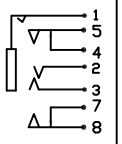
MODEL NO.	C

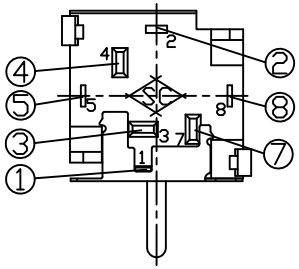

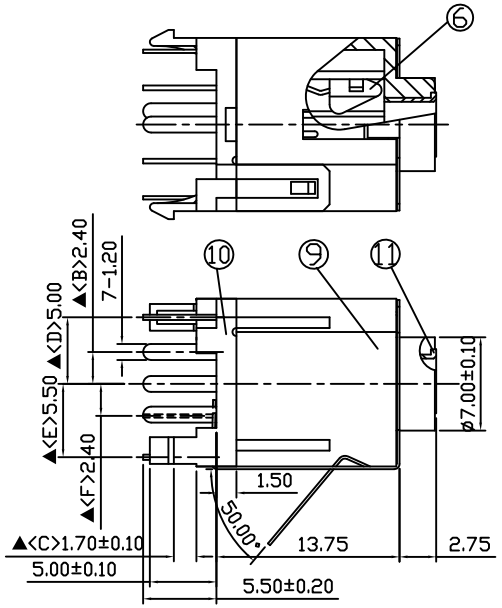

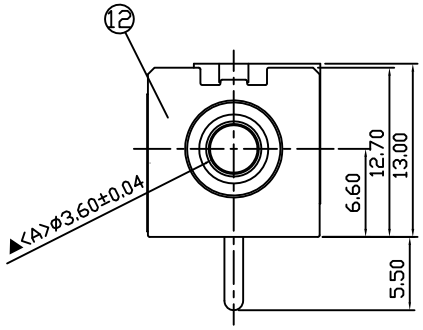

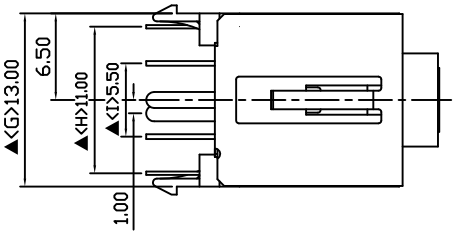

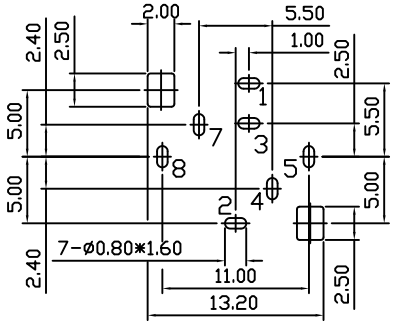

Pin Hole Layout
(Jack Bottom View)

NO.	Description	Material	Q'TY	Finish
12.	Metal Plate	0.2T Phosphor Bronze	1	Nickel Plated
11.	Barrel	Low lead Brass Rod	1	Nickel Plated
10.	Back Cover	PBT	1	577C Green Color
9.	Housing	PBT	1	577C Green Color
8.	Break Terminal	0.25T Phosphor Bronze	1	Silver Plated
7.	Separator Terminal	0.3T Brass	1	Silver Plated
6.	Insulator	POM	2	White Color
5.	Break Terminal	0.25T Phosphor Bronze	1	Silver Plated
4.	Separator Spring	0.3T Brass	1	Silver Plated
3.	Ring Spring	0.25T Phosphor Bronze	1	Silver Plated
2.	Tip Spring	0.35T Phosphor Bronze	1	Silver Plated
1.	Earth Spring	0.25T Phosphor Bronze	1	Silver Plated

S.C. PRECISION INDUSTRIAL CO., LTD.

DATE	DWN	CHKD	APVD	MANAGER
09.16.2020	王平華			

PART NAME : 3.5ø PHONE JACK | PART NUMBER: SCJ339R0NCS0G04L | VERSION: 1.0

TOLERANCE : ±0.3mm UNLESS OTHERWISE SPECIFIED | UNIT: mm | SCALE: /

For Redference
僅供參攷

RoHS&SVHC
Compliant

SPECIFICATIONS:
Contact Resistance : 30mΩ max
Insulation Resistance : 100MΩ min. at DC 500V
Dielectric Withstand Voltage : AC 500V for one minute
Remark: ▲: The Most Important Dimension