SCHEMATIC	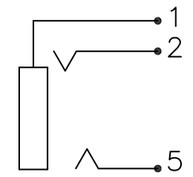
MODEL NO	X

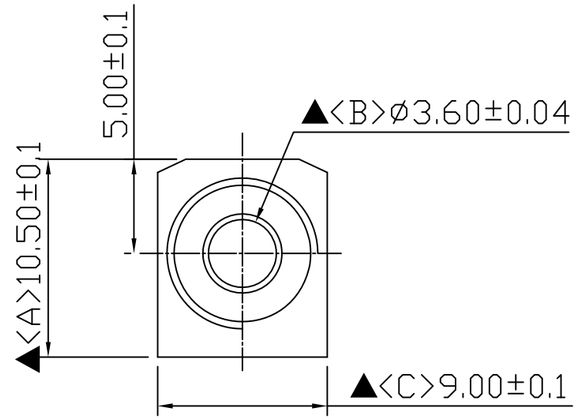

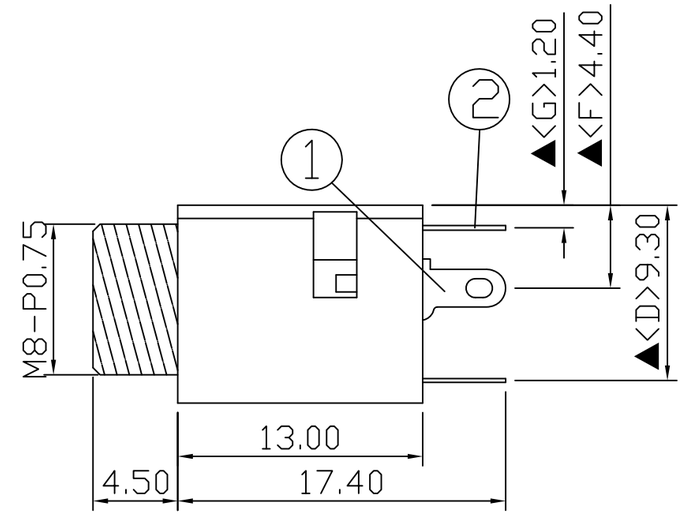

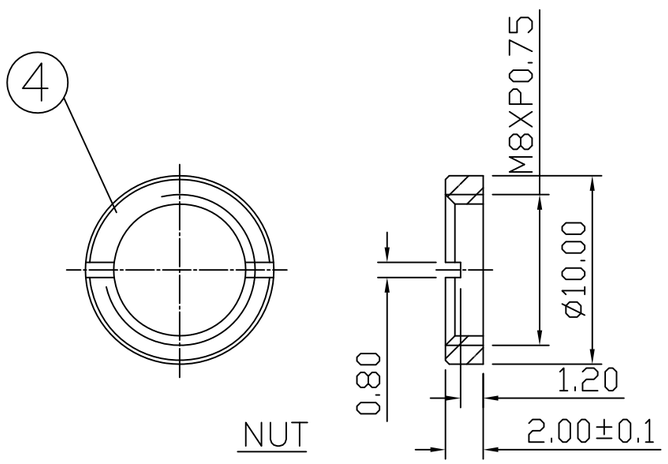

NUT

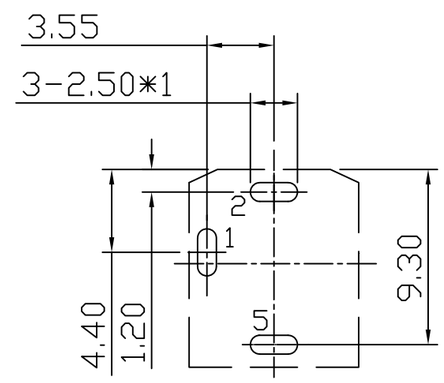

Pin Hole Layout
(Jack Bottom View)

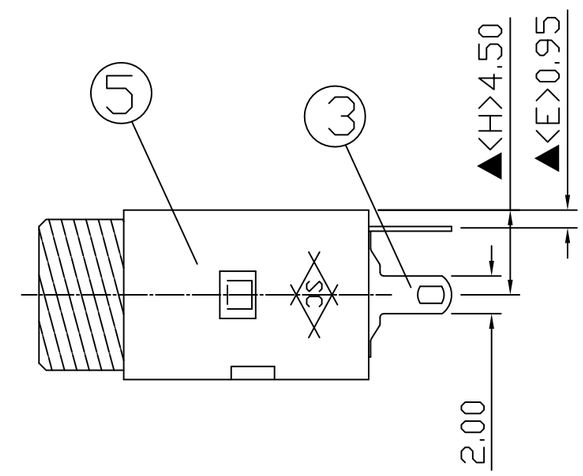

NO.	Description	Material	Q'TY	Finish
5.	Housing	PBT	1	Black Color
4.	Nut	Low lead Brass Rod	1	Nickel Plated
3.	Tip Spring	0.2T Phosphor Bronze	1	Silver Plated
2.	Ring Spring	0.25T Phosphor Bronze	1	Silver Plated
1.	Earth Terminal	0.25T Phosphor Bronze	1	Silver Plated

S.C. PRECISION INDUSTRIAL CO., LTD.

DATE	DWN	CHKD	APVD	MANAGER
08.20.2020	王平華			

PART NAME : 3.5ø PHONE JACK

PART NUMBER : SCJ332P10XS3B00L

VERSION:1.0

TOLERANCE :±0.3mm UNLESS OTHERWISE SPECIFIED

UNIT:mm

SCALE:1/1

For Redference
僅供參攷

RoHS&SVHC Compliant

SPECIFICATIONS:
Contact Resistance : 30mΩ max
Insulation Resistance : 100MΩ min. at DC 500V
Dielectric Withstanding Voltage: AC 500V for one minute
Remark: ▲: The Most Important Dimension