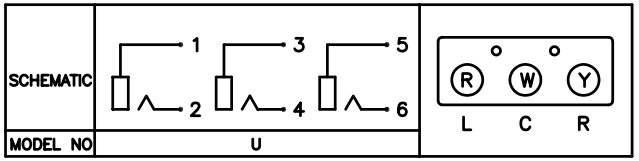

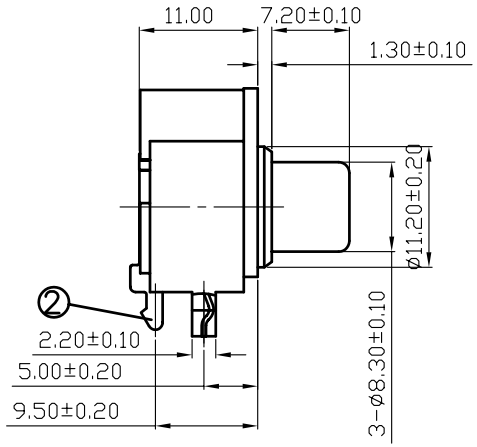

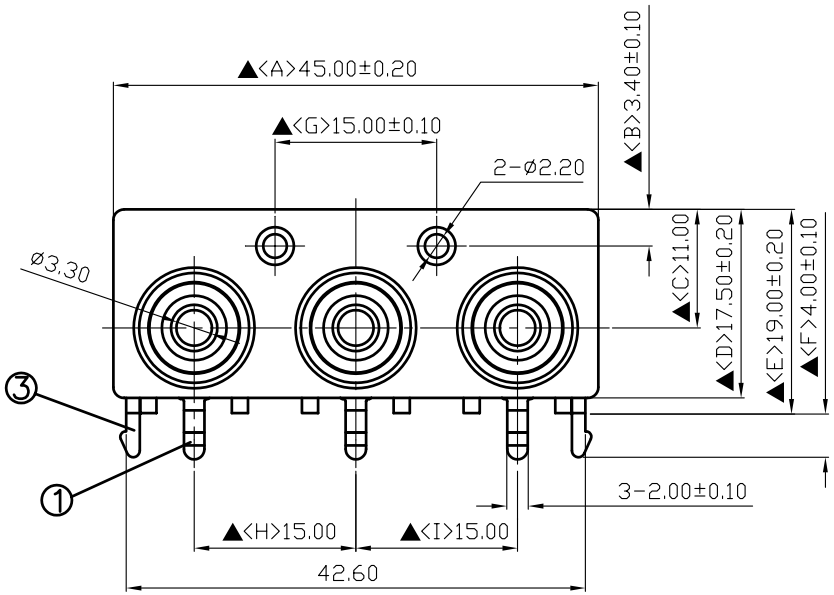

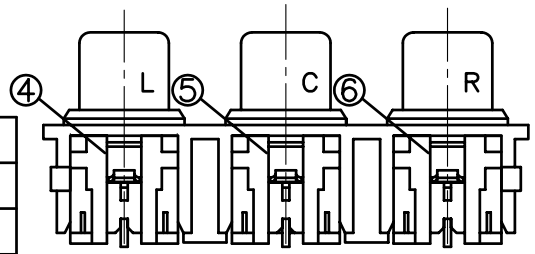

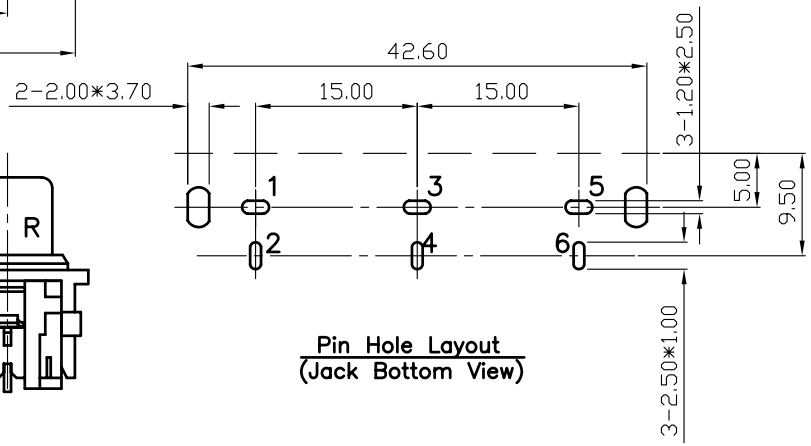

Pin Hole Layout
(Jack Bottom View)

NO.	Description	Material	Q'TY	Finish
6.	Housing	PBT	1	Yellow Color
5.	Housing	PBT	1	White Color
4.	Housing	PBT	1	Red Color
3.	Base	PBT	1	Black Color
2.	Pin	0.6T Brass	3	Silver Plated
1.	Earth Terminal	0.4T Brass	3	Gold Plated

S.C. PRECISION INDUSTRIAL CO., LTD.

DATE	DWN	CHKD	APVD	MANAGER
09.06.2006				

PART NAME : PIN JACK

PART NUMBER: SCP661CGS234U00G

VERSION: 3.0

TOLERANCE : ±0.3mm UNLESS OTHERWISE SPECIFIED

UNIT: mm

SCALE: 1/1

RoHS Compliant

For Reference 僅供參考

SPECIFICATIONS:
Contact Resistance : 30mΩ max
Insulation Resistance : 100MΩ min. at DC 500V
Dielectric Withstand Voltage : AC 500V for one minute
Remark: ▲: The Most Important Dimension