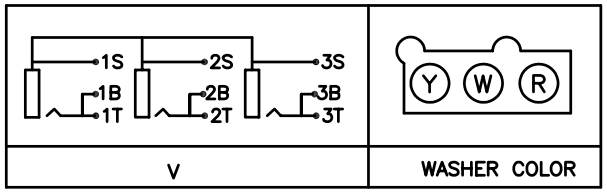

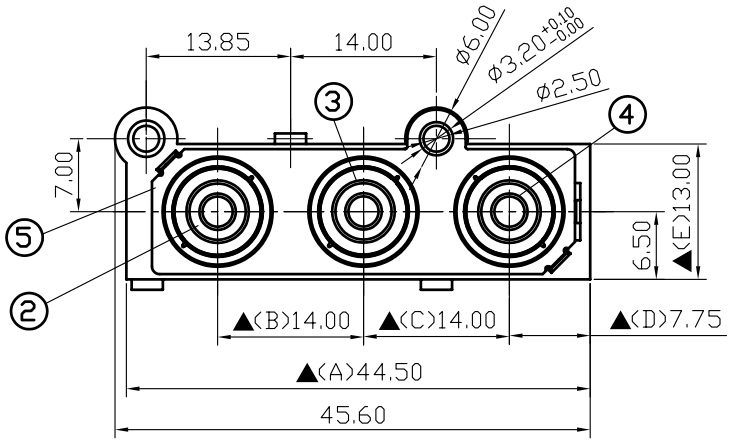

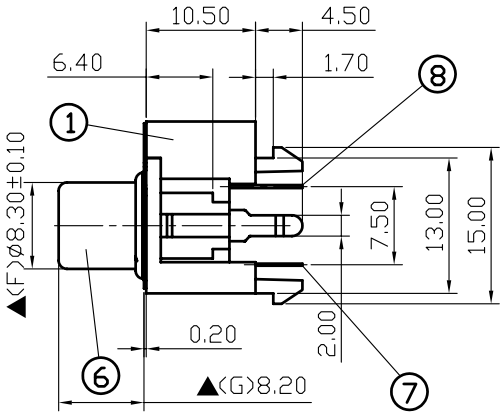

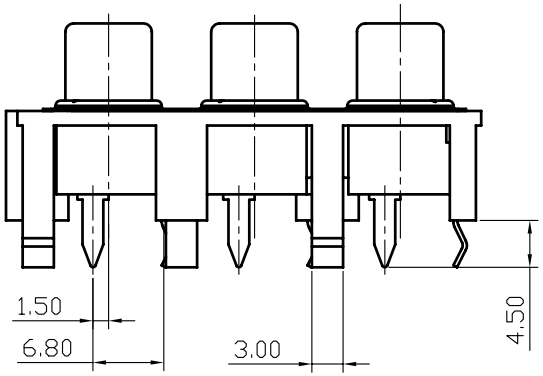

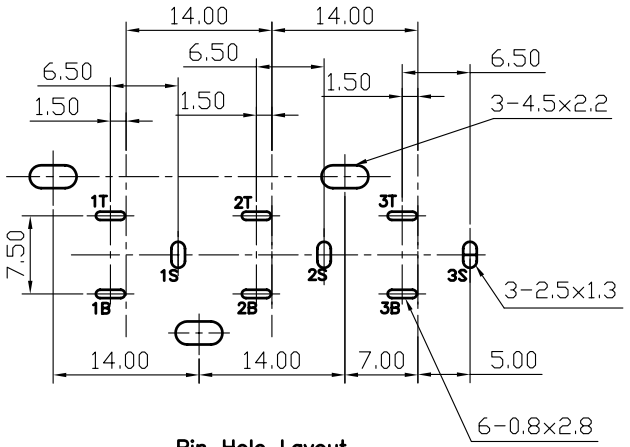

Pin Hole Layout
(Jack Bottom View)

NO.	Description	Material	Q'TY	Finish
8.	Tip Contact	0.3T Brass	3	Silver Plated
7.	Break Contact	0.3T Phosphor Bronze	3	Silver Plated
6.	Outer Contact	0.4T Bronze	3	Nickel Plated
5.	Earth Fitting	0.2T SUS304	1	
4.	Washer	PBT	1	Red Plated
3.	Washer	PBT	1	White Plated
2.	Washer	PBT	1	Yellow Color
1.	Housing	PA66+33%GF	1	Black Color

S.C. PRECISION INDUSTRIAL CO., LTD.

DATE	DWN	CHKD	APVD	MANAGER
11.18.2009				

PART NAME : PIN JACK

PART NUMBER: SCP912VNS432000G

VERSION:3.0

TOLERANCE :±0.3mm UNLESS OTHERWISE SPECIFIED

UNIT:mm

SCALE:1/1

RoHS Pb Free Process

For Reference 僅供參考

SPECIFICATIONS:
Contact Resistance : 30mΩ max
Insulation Resistance : 100MΩ min. at DC 500V
Dielectric Withstanding Voltage: AC 500V for one minute
Remark: ▲: The Most Important Dimension