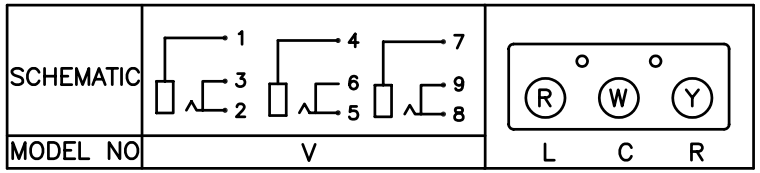

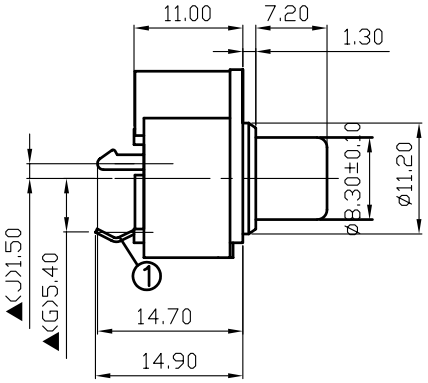

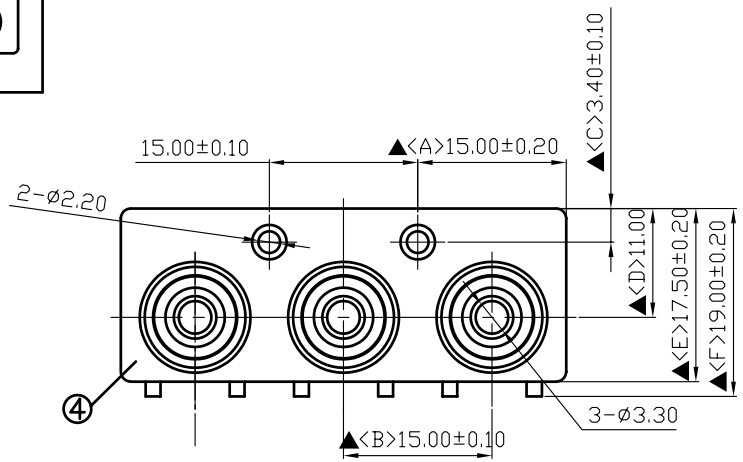

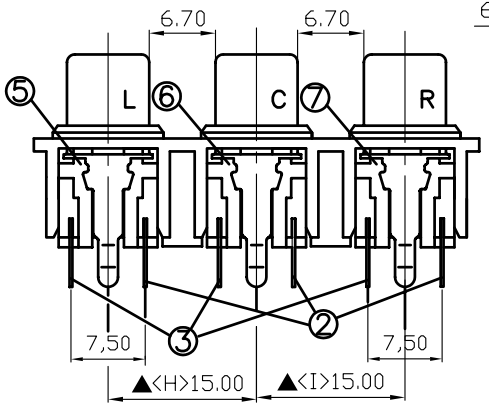

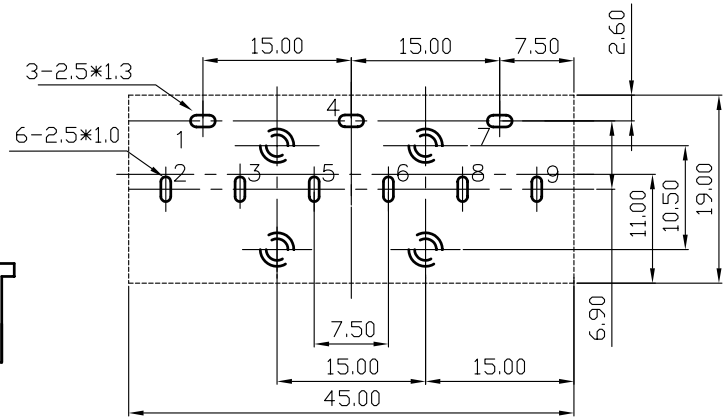

Pin Hole Layout
(Jack Bottom View)

NO.	Description	Material	Q'TY	Finish
7.	Housing	PBT	1	Yellow Color
6.	Housing	PBT	1	White Color
5.	Housing	PBT	1	Red Color
4.	Base	PBT	1	Black Color
3.	Pin	0.3T Phosphor Bronze	3	Silver Plated
2.	Pin	0.3T Brass	3	Silver Plated
1.	Earth Terminal	0.4T Brass	3	Nickel Plated

S.C. PRECISION INDUSTRIAL CO., LTD.

DATE	DWN	CHKD	APVD	MANAGER
04.19.2008				

PART NAME:PIN JACK | PART NUMBER : SCP678CNS234V00G | VERSION:3.0

TOLERANCE:±0.3mm UNLESS OTHERWISE SPECIFIED | UNIT:mm | SCALE:1/1

RoHS Compliant

For Reference 僅供參考

SPECIFICATIONS:
Contact Resistance :30mΩ max
Insulation Resistance :100MΩ min.at DC500V
Dielectric Withstand Voltage:AC 500V for one minute
Remark:▲:The Most Important Dimension