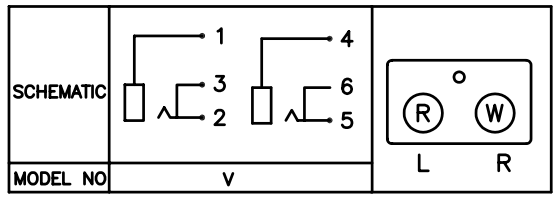

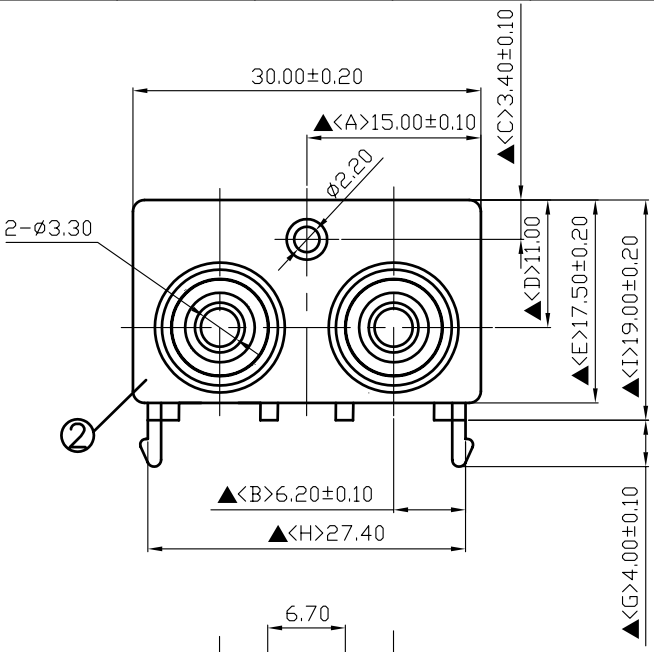

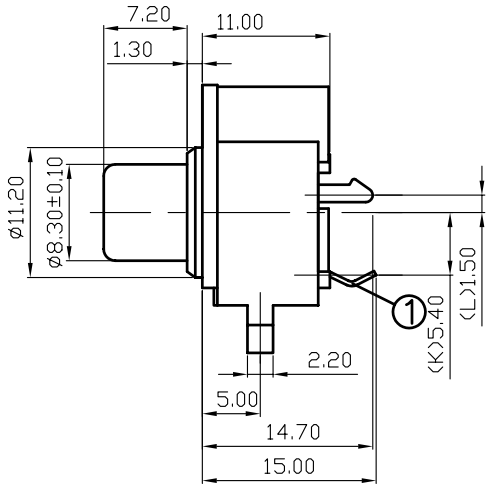

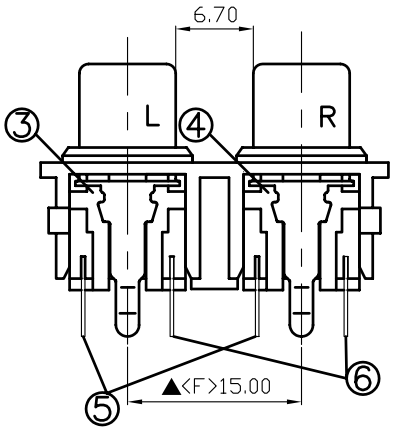

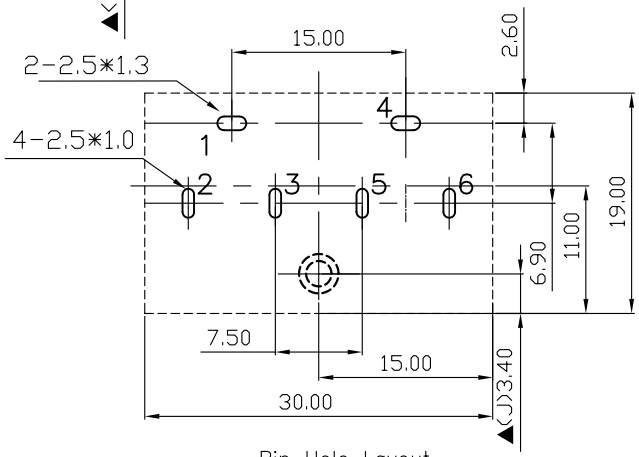

Pin Hole Layout
(Jack Bottom View)

NO.	Description	Material	Q'TY	Finish
6.	Pin	0.3T Phosphor Bronze	2	Silver Plated
5.	Pin	0.3T Phosphor Bronze	2	Silver Plated
4.	Housing	PBT	1	White Color
3.	Housing	PBT	1	Red Color
2.	Base	PBT	1	Black Color
1.	Earth Terminal	0.4T Brass	2	Nickel Plated

S.C. PRECISION INDUSTRIAL CO., LTD.

DATE	DWN	CHKD	APVD	MANAGER
04.28.2008				

PART NAME : PIN JACK

PART NUMBER: SCP666BNS230V00G

VERSION: 2.0

TOLERANCE :±0.3mm UNLESS OTHERWISE SPECIFIED

UNIT:mm

SCALE:1/1

RoHS Compliant

For Reference 僅供參考

SPECIFICATIONS:

Contact Resistance : 30mΩ max

Insulation Resistance : 100MΩ min. at DC 500V

Dielectric Withstand Voltage : AC 500V for one minute

Remark: ▲: The Most Important Dimension