SCHEMATIC	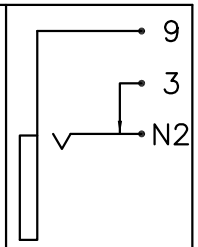
MODEL NO	E

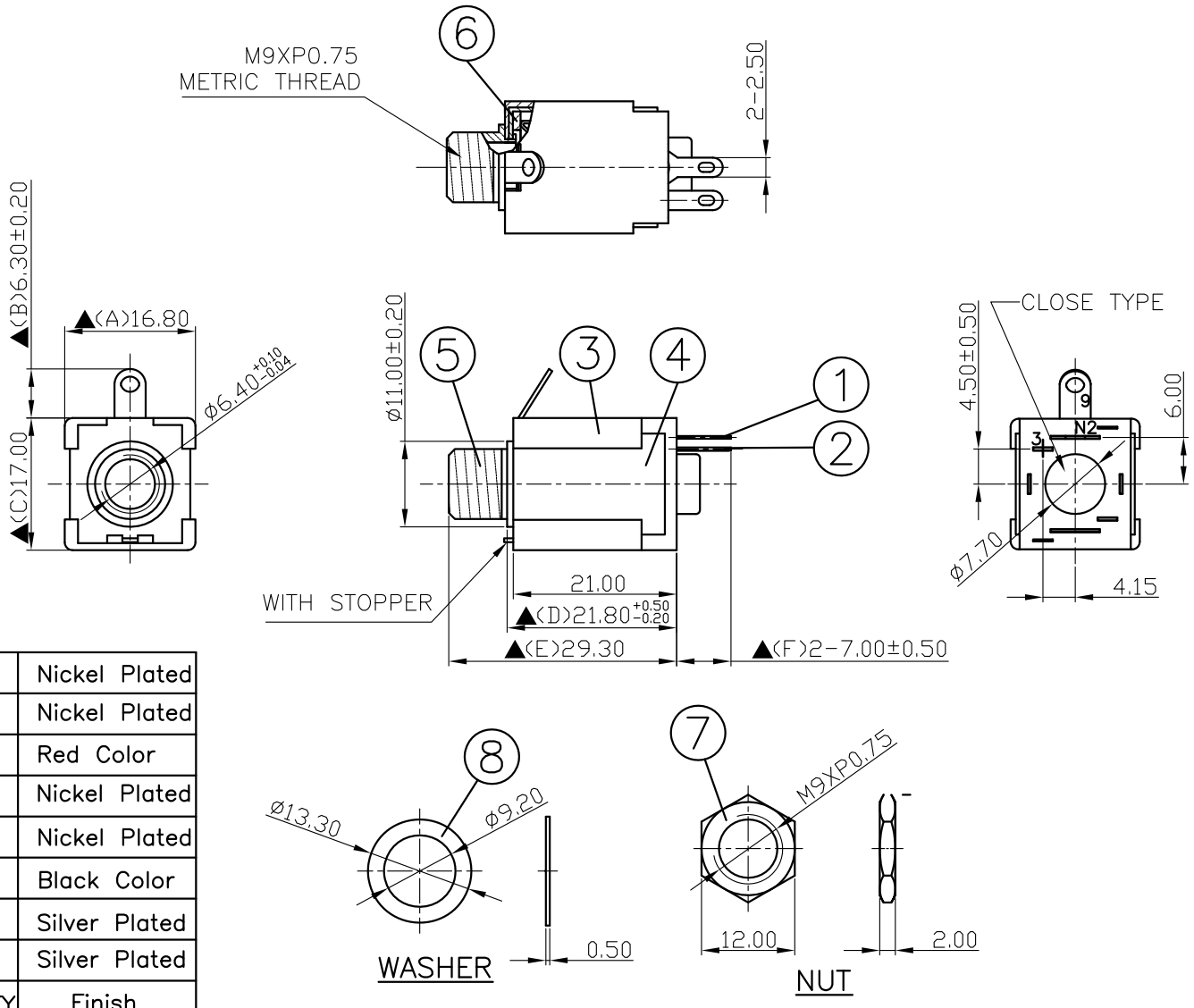

NO.	Description	Material	Q'TY	Finish
8.	Washer	0.5T Steel	1	Nickel Plated
7.	Nut	2.0T Steel	1	Nickel Plated
6.	Insulator	Red Vulcanited Fibre	1	Red Color
5.	Barrel(W/Thread)	Low Lead Brass Rod	1	Nickel Plated
4.	Cover	0.5T Steel	1	Nickel Plated
3.	Housing	POM	1	Black Color
2.	Break Terminal	0.4T Brass	1	Silver Plated
1.	Tip Spring	0.35T Phosphor Bronze	1	Silver Plated

S.C. PRECISION INDUSTRIAL CO., LTD. 旭全

DATE	DWN	CHKD	APVD	MANAGER
01.06.2022	王平華			

PART NAME :6.3ø PHONE JACK | PART NUMBER: SCJ614M2NES3B22L | VERSION:2.0

TOLERANCE :±0.3mm UNLESS OTHERWISE SPECIFIED | UNIT:mm | SCALE:1/1

For Redference
僅供參考

RoHS&SVHC
Compliant

SPECIFICATIONS:
Contact Resistance : 30mΩ max
Insulation Resistance : 100MΩ min. at DC 500V
Dielectric Withstand Voltage : AC 500V for one minute
Remark: ▲: The Most Important Dimension